CHAPTER 1
PRINCIPLES OF RADAR

Introduction

- Radar is an acronym for **Radio Detection and Ranging.**
- The term "radio" refers to the use of electromagnetic waves with wavelength in so called radio wave portion of the spectrum, which covers a wide range from 10^4 Km to 1 cm.
- It is a system used to detect, range (determine the distance) and map objects such as aircraft and rain.
- Strong radio waves are transmitted, and a receiver listen for reflected echoes.
- By analyzing the reflected signal, the reflector can be located, and sometimes identified.
- Although the amount of returned is tiny, radio signal can easily be detected and amplified.
- It can operate in darkness, haze, fog, rain and show, it has ability to measure distance with high accuracy in all-weather conditions.
- The electronics principal on which radar operates is very similar to the principle of sound wave reflection.
- If you shout in the direction of sound-reflecting object (like a rocky canon or cave), you will hear an echo.

- If you know the speed of sound in air, you can estimate the distance and general direction of the object.
- The time required for a return echo can roughly converted in to distance if the speed of sound is known.
- The radio frequency energy is transmitted to and reflects from the reflecting object.
- A small portion of the energy s reflected and return to the radar set. This returned energy is called **ECHO**.
- Radar uses electromagnetic energy pulses in the same way, as shown in figure 1.1.

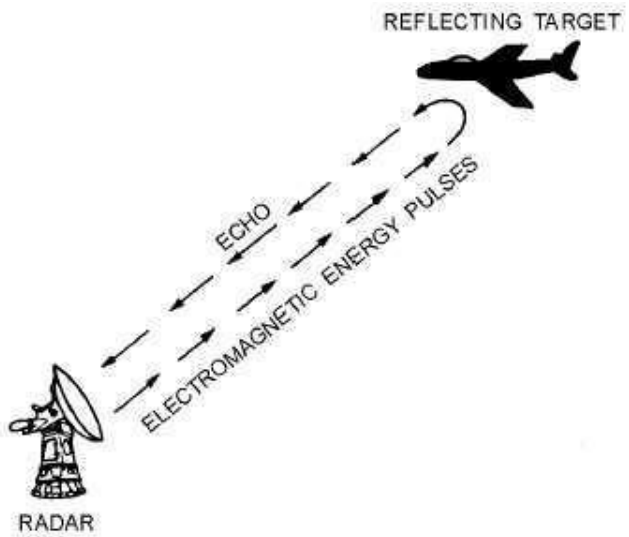

Range to a Target

- The most common radar waveform is a train of narrow, rectangular-shape pulses modulating a sine wave carrier. The distance, or range, to the target is determined by measuring the time T_R taken by the pulse to travel to the target and return. Since electromagnetic energy propagates at the speed of light c = 3 x 108 m/s, the range R is;

$$R = CT_R / 2$$

- The factor 2 appears in the denominator because of the two-way propagation of radar. With the range in kilometers or nautical miles, and TR in microseconds, Eq. above becomes;

$$R\ (Km) = 0.15\ T_R\ (us) \quad or \quad R\ (nmi) = 0.081\ T_R\ (us)$$

Maximum Unambiguous Range

- Once the transmitted pulse is emitted by the radar, a sufficient length of time must elapse to allow any echo signals to return and be detected before the next pulse may be transmitted.
- Therefore the rate at which the pulses may be transmitted is determined by the longest range at which targets are expected.
- If the pulse repetition frequency is too high, echo signals from some targets might arrive after the transmission of the next pulse, and ambiguities in measuring range might result.

- Echoes that arrive after the transmission of the next pulse are called second-time-around or multiple-time-around echoes. Such an echo would appear to be at a much shorter range than the actual and could be misleading if it were not known to be a second-time-around echo.
- The range beyond which targets appear as second-time-around echoes is called the **maximum unambiguous range** and is given by;

$$R_{unb} = cT_P / 2 = c/2f_p$$

- Where fp = pulse repetition frequency, in Hz. A plot of the maximum unambiguous range as a function of pulse repetition frequency is shown in Fig. 1.2.

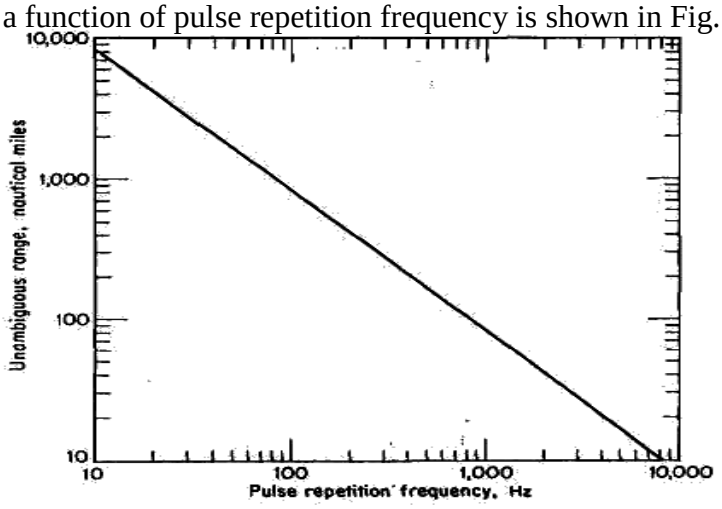

Figure 1.2. Maximum unambiguous range R_{unb} as function of f_p

Radar Frequencies

Band designation	Nominal frequency range	Specific radiolocation (radar) bands based on ITU assignments for region 2
HF	3-30 MHz	
VHF	30-300 MHz	138-144 MHz
		216-225
UHF	300-1000 MHz	420-450 MHz
		890-942
L	1000-2000 MHz	1215-1400 MHz
S	2000-4000 MHz	2300-2500 MHz
		2700-3700
C	4000-8000 MHz	5250-5925 MHz
X	8000-12,000 MHz	8500-10,680 MHz
K_u	12.0-18 GHz	13.4-14.0 GHz
		15.7-17.7
K	18-27 GHz	24.05-24.25 GHz
K_a	27-40 GHz	33.4-36.0 GHz
mm	40-300 GHz	

Figure 1.3. IEEE standard radar frequencies

Applications of Radar

- Radar has been employed on the ground, in the air, on the sea, and in space.
- Ground-based radar has been applied chiefly to the detection, location, and tracking of aircraft or space targets.
- Shipboard radar is used as a navigation aid and safety device to locate buoys, shore lines, and other ships as well as for observing aircraft.
- Airborne radar may be used to detect other aircraft, ships, or land vehicles, or it may be used for mapping of land, storm avoidance, terrain avoidance, and navigation.
- In space, radar has assisted in the guidance of spacecraft and for the remote sensing of the land and sea.

- **Air Traffic Control (ATC):** Radars are employed throughout the world for the purpose of safely controlling air traffic en route and in the vicinity of airports. Aircraft and ground vehicular traffic at large airports are monitored by means of high-resolution radar. Radar has been used with GCA (ground-control approach) systems to guide aircraft to a safe landing in bad weather. In addition, the microwave landing system and the widely used ATC radar-beacon system are based in large part on radar technology.

- **Aircraft Navigation:** The weather-avoidance radar used on aircraft to outline regions of precipitation to the pilot is a classical form of radar. Radar is also used for terrain avoidance and terrain following. Although they may not always be thought of as radars, the radio altimeter (either FM/CW or pulse) and the Doppler navigator are also radars. Sometimes ground-mapping radars of moderately high resolution are used for aircraft navigation purposes.

- **Ship Safety:** Radar is used for enhancing the safety of ship travel by warning of potential collision with other ships, and for detecting navigation buoys, especially in poor visibility. In terms of numbers, this is one of the larger applications of radar, but in terms of physical size and cost it is one of the smallest. It has also proven to be one of the most reliable radar systems. Automatic detection and tracking equipment's (also called plot extractors) are commercially available for use with such radars for the purpose of collision avoidance. Shore-based radar of moderately high resolution is also used for the surveillance of harbors as an aid to navigation.
- **Space:** Space vehicles have used radar for rendezvous and docking, and for landing on the moon. Some of the largest ground-based radars are for the detection and tracking of satellites. Satellite-borne radars have also been used for remote sensing as mentioned below.

- **Remote Sensing:** All radars are remote sensors; however, as this term is used it implies the sensing of geophysical objects, or the "environment." For some time, radar has been used as a remote sensor of the weather. It was also used in the past to probe the moon and the planets (radar astronomy). The ionospheric sounder, an important adjunct for HF (short wave) communications, is a radar. Remote sensing with radar is also concerned with Earth resources, which includes the measurement and mapping of sea conditions, water resources, ice cover, agriculture, forestry conditions, geological formations, and environmental pollution. The platforms for such radars include satellites as well as aircraft.
- **Law Enforcement:** In addition to the wide use of radar to measure the speed of automobile traffic by highway police, radar has also been employed as a means for the detection of intruders.
- **Military:** Many of the civilian applications of radar are also employed by the military. The traditional role of radar for military application has been for surveillance, navigation, and for the control and guidance of weapons. It represents, by far, the largest use of radar.

- **Radar Altimeter:** it measure an aircraft's true height above ground.

Radar Range Equation

- The radar equation relates the range of a radar to the characteristics of the transmitter, receiver, antenna, target, and environment. It is useful not just as a means for determining the maximum distance from the radar to the target, but it can serve both as a tool for understanding radar operation and as a basis for radar design.
- If the power of the radar transmitter is denoted by Pt, and if an isotropic antenna is used (one which radiates uniformly in all directions), the power density (Watts per unit area) at a distance R from the radar is equal to the transmitter power divided by the surface area $4\Pi R^2$ of an imaginary sphere of radius R, or

$$\textbf{Power density at range R from an isotropic antenna} = P_t / 4\Pi R^2$$

- Radars employ directive antennas to channel, or direct, the radiated power Pt into some particular direction. The gain G of an antenna is a measure of the increased power radiated in the direction of the target as compared with the power that would have been radiated from an isotropic antenna.
- It may be defined as the ratio of the maximum radiation intensity from the subject antenna to the radiation intensity from a lossless, isotropic antenna with the same power input. (The radiation intensity is the power radiated per unit solid angle in a given direction.) The power density at the target from an antenna with a transmitting gain G is;

$$\textbf{Power density at range R from a directive antenna} = P_tG / 4\Pi R^2$$

- The target intercepts a portion of the incident power and reradiates it in various directions.
- The measure of the amount of incident power intercepted by the target and reradiated back in the direction of the radar is denoted as the radar cross section σ, and is defined by the relation

$$\textbf{Reradiated power density back at the radar} = (P_tG / 4\Pi R^2) (\sigma / 4\Pi R^2)$$

- The radar cross section σ has units of area. It is a characteristic of the particular target and is a measure of its size as seen by the radar. The radar antenna captures a portion of the echo power. If the effective area of the receiving antenna is denoted Ae, the power Pr, received by the radar is;

$$P_r = (P_tG / 4\Pi R^2) (\sigma / 4\Pi R^2) A_e$$

- The maximum radar range Rmax is the distance beyond which the target cannot be detected. It occurs when the received echo signal power P, just equals the minimum detectable signal Smin,
- Therefore;

$$R_{max} = P_tG\sigma A_e / (4\Pi)^2 S_{min}$$

- This is the fundamental form of the radar equation. Note that the important antenna parameters are the transmitting gain and the receiving effective area.
- **Case 1:** Antenna theory gives the relationship between the transmitting gain and the receiving effective area of an antenna as;

$$G = 4\Pi A_e / \lambda^2$$

- Since radars generally use the same antenna for both transmission and reception, Eq. can be substituted into Eq. above, first for Ae, then for G, to give two other forms of the radar equation;

$$R_{max} = [\, P_t G^2 \sigma \lambda^2 / (4\Pi)^3 S_{min} \,]^{1/4}$$

- **Case 2:**
  Similarly

  $$A_e = G\lambda^2 / 4\Pi$$

  Then

  $$R_{max} = [\, P_t A_e^2 \sigma / (4\Pi)^3 S_{min} \lambda^2 \,]^{1/4}$$

  The Radar range is proportional to $\lambda^{1/2}$ in Case 1 & it is proportional to in $\lambda^{-1/2}$ Case 2. So we can conclude that the Radar range is independent of wavelength.

Different Types of Radar:

- Radar systems may be divided into types based on the designed use.
- Some commonly use radar systems are;
  1. Air defense radars
  2. Air traffic control radar
  3. Fire control radar
  4. Speed gauges
  5. Mortar locating radar
  6. Radar satellites
  7. Weather radar
  8. Ground penetrating radar etc.

- **Radars are classifies as below**;

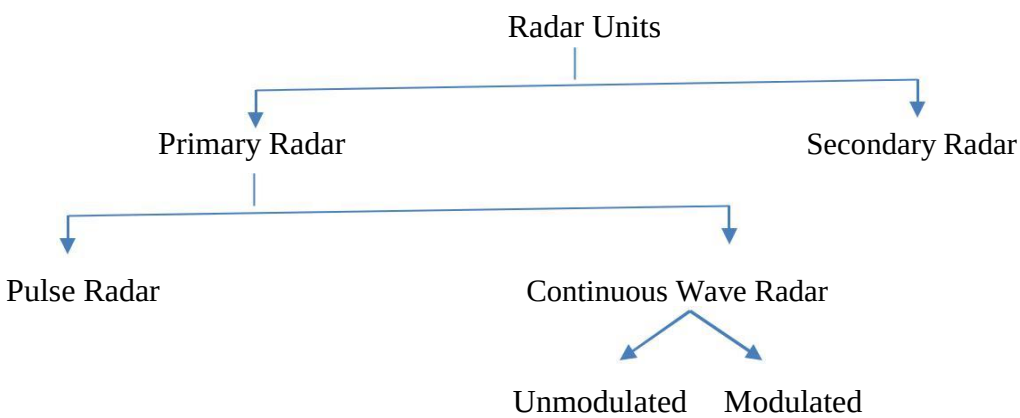

- **Primary Radar:-**

  A primary radar transmits high-frequency signal which are reflected at targets. The echoes are received and evaluated. This means, unlike secondary radar units a primary radar unit receive its own emitted signal as an echoes again.

- **Secondary Radar:-**

  At these radar units the airplane must have a transponder on board and receives an encoded signal of the secondary radar unit. An active also encoded response signal, which is returned to the radar unit then is generated in the transponder. eg. IFF (Identification of Friend and Foe).

- **Pulse Radar:-**

  Pulse radar units transmit a high-frequency impulsive signal of high power. After this a longer break in which the echoes can be received follows before a new transmitted signal s sent out. Direction, distance and sometimes altitude also can be determined.

- **Continuous Wave Radar:-**

  Continuous-wave radar is a type of radar system where a known stable frequency continuous-wave radio energy is transmitted and then received from any reflecting objects. Continuous-wave (CW) radar uses Doppler, which renders the radar immune to interference from large stationary objects and slow moving clutter. CW radar systems are used at both ends of the range spectrum.

- **Unmodulated CW Radar:-**

  The transmitted signal of these equipment is constant in amplitude and frequency.

  These equipment's are specialized in speed measuring. Distance cannot be measured. eg. It is used as a speed gauge of the police.

- **Modulated Radar:-**

  Frequency-modulated continuous-wave radar (FM-CW) – also called continuous-wave frequency-modulated (CWFM) radar – is a short-range measuring radar set capable of determining distance. This increases reliability by providing distance measurement along with speed measurement, which is essential when there is more than one source of reflection arriving at the radar antenna. This kind of radar is often used as "radar altimeter" to measure the exact height during the landing procedure of aircraft. It is also used as early-warning radar, wave radar, and proximity sensors. Doppler shift is not always required for detection when FM is used.

  In this system the transmitted signal of a known stable frequency continuous wave varies up and down in frequency over a fixed period of time by a modulating signal. Frequency deviation between the receive signal and the transmit signal increases with delay, and hence with distance. This smears out, or blurs, the Doppler signal. Echoes from a target are then mixed with the transmitted signal to produce a beat signal which will give the distance of the target after demodulation.

Radar Block Diagram

- The operation of a typical pulse radar may be described with the aid of the block diagram shown in Fig.3.1.

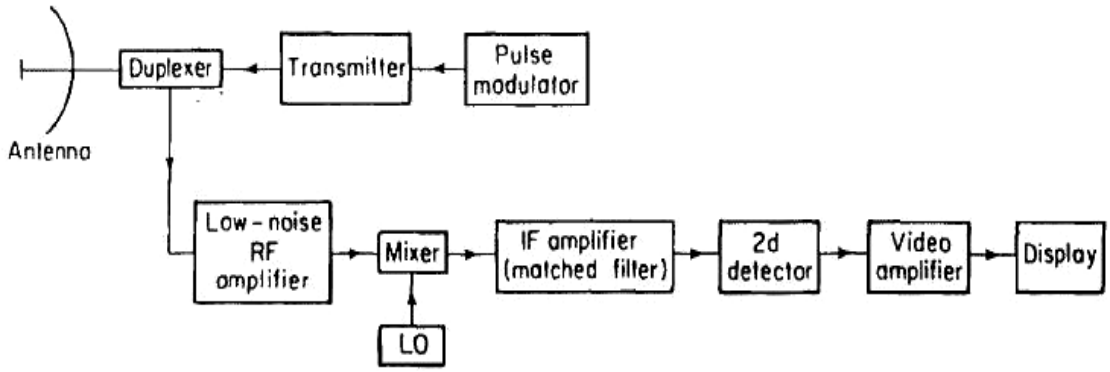

Figure 3.1. Block diagram of simple pulse radar

- **Transmitter:-**

The transmitter may be an oscillator, such as a magnetron, that is "pulsed" (turned on and on) by the modulator to generate a repetitive train of pulses. The magnetron has probably been the most widely used of the various microwave generators for radar. A typical radar for the detection of aircraft at ranges of 100 or 200 nmi might employ a peak power of the order of a megawatt, an average power of several kilowatts, a pulse width of several microseconds, and a pulse repetition frequency of several hundred pulses per second.

- **Pulse Modulator:-**

The radar modulator is a device, which provides the high power to the transmitter tube to transmit during transmission period. It makes the transmitting tube ON and OFF to generate the desired waveform. Modulator allows the storing the energy in a capacitor bank during rest time.

The stored energy then can be put into the pulse when transmitted. It provides rectangular voltage pulses which act as the supply voltage to the output tube such as magnetron, thus switching it ON and OFF as required.

- **Duplexer:-**

The receiver must be protected from damage caused by the high power of the transmitter. This is the function of the duplexer. The duplexer also serves to channel the returned echo signals to the receiver and not to the transmitter. The duplexer might consist of two gas-discharge devices, one known as a TR (transmit-receive) and the other an ATR (anti-transmit-receive). The TR protects the receiver during transmission and the ATR directs the echo signal to the receiver during reception. Solid-state ferrite circulators and receiver protectors with gas-plasma TR devices and/or diode limiters are also employed as duplexers.

- **Antenna:-**

  The antenna takes the radar pulse from the transmitter and puts it into the air. Furthermore, the antenna must focus the energy into a well-defined beam which increase the power and permits a determination of the direction of the target.

- **Receiver:-**

  The receiver is usually of the super-heterodyne type whose function is to detect the desired signal in the presence of noise, interference and clutter. The receiver in pulsed radar consists of low noise RF amplifier, mixer, local oscillator, IF amplifier, detector, video amplifier and radar display.

- **Low Noise RF Amplifier:-**

  Low noise amplifier is the first stage of the receiver. It is low noise transistor amplifier or a parametric amplifier or a TWT amplifier. Silicon bipolar transistor is used at lower radar frequencies (below L-band 1215 to 1400 MHz) and the GaAs FET is preferred at higher frequencies. It amplifies the received weak echo signal.

- **Mixer and Local Oscillator:-**

  These convert RF signal output from RF amplifier to comparatively lower frequency level called Intermediate Frequency (IF). The typical value for pulse radar is 30 MHz or 60MHz.

- **IF Amplifier:-**

  IF Amplifier consist of a cascade of tuned amplifier, these can be synchronous, that is all tuned to the same frequency and having identical band pass characteristics. If Aa really large bandwidth is needed, the individual IF may be staggered tuned. The typical value for pulse radar is 30 MHz or 60MHz.

- **Detector:-**

  Detector is often a schottky-barrier diode which extract the pulse modulation from the IF amplifier output. The detector output is then amplified by the video amplifier to a level where it can be properly displayed on screen directly or via DSP.

- **Display Unit:-**

  The received video signal are display on the CRT for further observation and actions. Different types of display system which are used in radar.

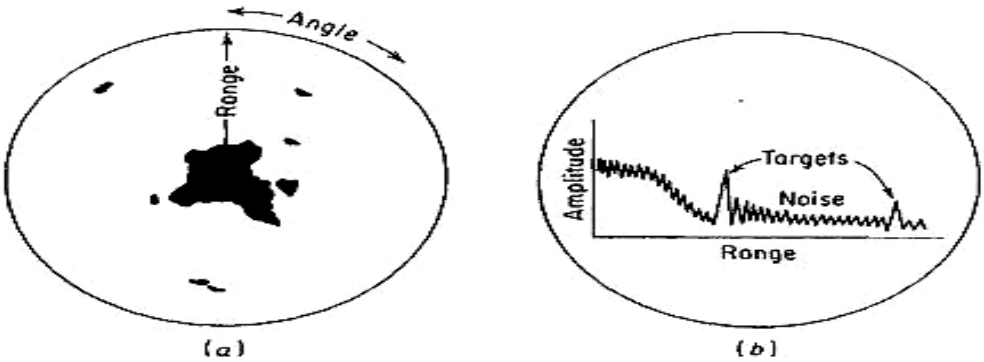

Figure 3.2. (a) PPI presentation displaying range vs. angle (intensity modulation); (b) A-scope presentation displaying amplitude vs. range (deflection modulation).

Common Parameters of Pulse Radar

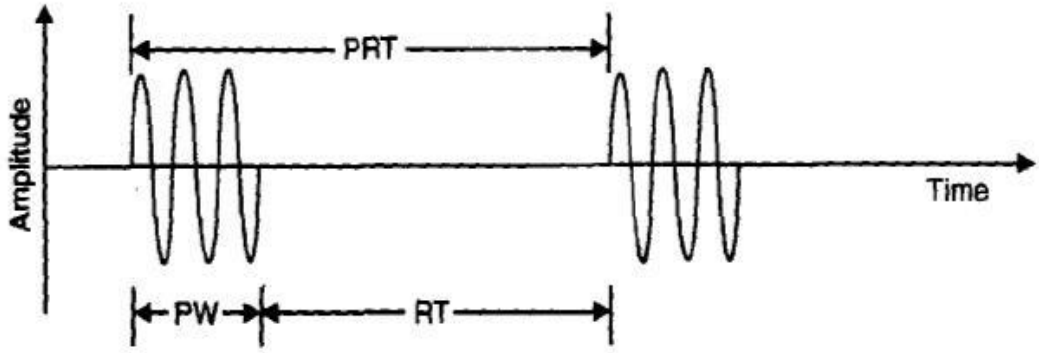

- **Pulse Width (PW):-**

  PW has units of time and is commonly expressed in ms. PW is the duration of the pulse.

- **Rest Time (RT):-**

  Rt is the interval between two pulses.

- **Pulse Repetition Time (PRT):-**

  PRT is the interval between the start of one pulse and start of another.

PRT = PW + RT

- **Pulse Repetition Frequency (PRF):-**

  PRF is the number of pulses transmitted per second and is equal to the inverse of PRT

PRF = 1/PRT

- **Radio Frequency (RF):-**

  RF is the frequency of the carrier wave which is being modulated to form the pulse train. It is expressed in terms of GHz or MHz.

- **Peak Power (P_t):-**

  It is defined as the power averaged over that carrier frequency cycle which occur at the maximum of the pulse power.it is usually equal to the one half of the maximum instantaneous power.

- **Average Power (P_{avg}):-**

  It is defined as the average transmitted power over the pulse repetition time or period.

$$P_{avg} = P_t \times (PW/PRT) = P_t \times PW \times PRF$$

- **Duty Cycle:-**It

  is defined as,

Duty Cycle = PW x PRF

Prediction of Range Performance

- The simple form of the radar equation expressed the maximum radar range Rmax, in terms of radar and target parameters:

$$R_{max} = \left[\frac{P_t G A_e \sigma}{(4\pi)^2 S_{min}}\right]^{1/4}$$

where P_t = transmitted power, watts
G = antenna gain
A_e = antenna effective aperture, m^2
σ = radar cross section, m^2
S_{min} = minimum detectable signal, watts

- All the parameters are to some extent under the control of the radar designer, except for the target cross section σ.
- The radar equation states that if long ranges are desired, the transmitted power must be large, the radiated energy must be concentrated into a narrow beam (high transmitting antenna gain), the received echo energy must be collected with a large antenna aperture (also synonymous with high gain), and the receiver must be sensitive to weak signals.

- In practice, however, the simple radar equation does not predict the range performance of actual radar equipment's to a satisfactory degree of accuracy.
- The predicted values of radar range are usually optimistic. In some cases the actual range might be only half that predicted. Part of this discrepancy is due to the failure of Eq. above to explicitly include the various losses that can occur throughout the system or the loss in performance usually experienced when electronic equipment is operated in the field rather than under laboratory-type conditions.
- Another important factor that must be considered in the radar equation is the statistical or unpredictable nature of several of the parameters. The minimum detectable signal Smin and the target cross section σ are both statistical in nature and must be expressed in statistical terms.
- Other statistical factors which do not appear explicitly in Eq. but which have an effect on the radar performance are the meteorological conditions along the propagation path and the performance of the radar operator, if one is employed.
- The statistical nature of these several parameters does not allow the maximum radar range to be described by a single number. Its specification must include a statement of the probability that the radar will detect a certain type of target at a particular range.

Minimum Detectable Signal

- The ability of a radar receiver to detect a weak echo signal is limited by the noise energy that occupies the same portion of the frequency spectrum as does the signal energy.
- The weakest signal the receiver can detect is called the minimum detectable signal.
- The specification of the minimum detectable signal is sometimes difficult because of its statistical nature and because the criterion for deciding whether a target is present or not may not be too well defined.

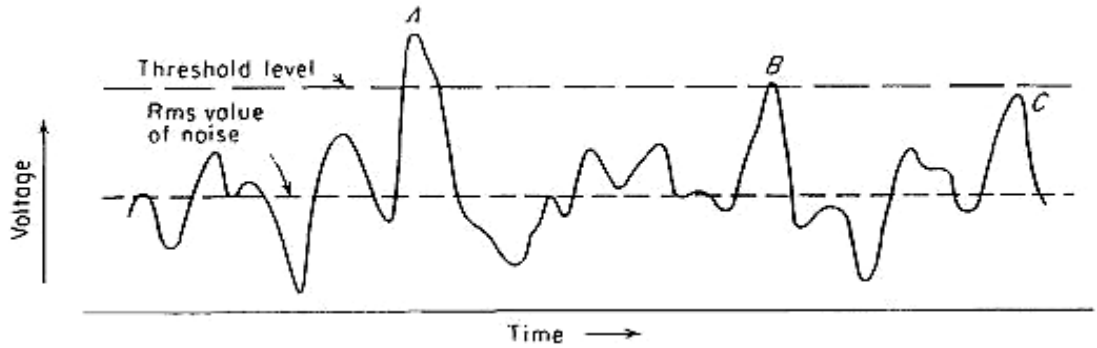

Figure 4.1. Typical envelope of tile radar receiver output as a function of time A, and B and C represent signal plus noise. A & B would be valid detections, but C is a missed detection.

- Detection is based on establishing a threshold level at the output of the receiver. If the receiver output exceeds the threshold, a signal is assumed to be present. This is called **threshold detection.**
- Consider the output of a typical radar receiver as a function of time (Fig. 4.1). This might represent one sweep of the video output displayed on an A-scope.
- The envelope has a fluctuating appearance caused by the random nature of noise. If a large signal is present such as at A in Fig. 4.1, it is greater than the surrounding noise peaks and can be recognized on the basis of its amplitude.
- Thus, if the threshold level were set sufficiently high, the envelope would not generally exceed the threshold if noise alone were present, but would exceed it if a strong signal were present.
- If the signal were small, however, it would be more difficult to recognize its presence.
- The threshold level must be low if weak signals are to be detected, but it cannot be so low that noise peaks cross the threshold and give a false indication of the presence of targets.
- The voltage envelope of Fig. 4.1 is assumed to be from a matched-filter receiver. A matched filter is one designed to maximize the output peak signal to average noise (power) ratio.

- It has a frequency-response function which is proportional to the complex conjugate of the signal spectrum. (This is not the same as the concept of "impedance match of circuit theory).
- The ideal matched-filter receiver cannot always be exactly realized in practice, but it is possible to approach it with practical receiver circuits.
- A matched filter for a radar transmitting a rectangular-shaped pulse is usually characterized by a bandwidth B approximately the reciprocal of the pulse width τ, or $B\tau \approx 1$.
- The output of a matched-filter receiver is the cross correlation between the received waveform and a replica of the transmitted waveform.
- Hence it does not preserve the shape of the input waveform. (There is no reason to wish to preserve the shape of the received waveform so long as the output signal-to-noise ratio is maximized.)

Receiver Noise & Signal to Noise Ratio

Receiver Noise:

- Since noise is the chief factor limiting receiver sensitivity, it is necessary to obtain some means of describing it quantitatively.

- Noise is unwanted electromagnetic energy which interferes with the ability of the receiver to detect the wanted signal. It may originate within the receiver itself, or it may enter via the receiving antenna along with the desired signal.
- If the radar were to operate in a perfectly noise-free environment so that no external sources of noise accompanied the desired signal, and if the receiver itself were so perfect that it did not generate any excess noise, there would still exist an unavoidable component of noise generated by the thermal motion of the conduction electrons in the ohmic portions of the receiver input stages.
- This is called **thermal noise, or Johnson noise**, and is directly proportional to the temperature of the ohmic portions of the circuit and the receiver bandwidth.
- The available thermal-noise power generated by a receiver of bandwidth Bn, (in hertz) at a temperature T (degrees Kelvin) is equal to,

$$\text{Available thermal-noise power} = kTB_n$$

- Where k = Boltzmann's constant = 1.38×10^{-23} J/deg. If the temperature T is taken to be 290 K, which corresponds approximately to room temperature (62°F), the factor kT is 4×10^{-21} W/Hz of bandwidth. If the receiver circuitry were at some other temperature, the thermal-noise power would be correspondingly different.

- A receiver with a reactance input such as a parametric amplifier need not have any significant ohmic loss. The limitation in this case is the thermal noise seen by the antenna and the ohmic losses in the transmission line.
- For radar receivers of the superheterodyne type (the type of receiver used for most radar applications), the receiver bandwidth is approximately that of the intermediate-frequency stages.
- It should be cautioned that the bandwidth B, of Eq. is not the 3-dB, or half-power, bandwidth commonly employed by electronic engineers. It is an integrated bandwidth and is given by;

$$B_n = \frac{\int_{-\infty}^{\infty} |H(f)|^2 \, df}{|H(f_0)|^2}$$

- Where H(f) = frequency-response characteristic of IF amplifier (filter) and fo = frequency of maximum response (usually occurs at mid band). When H (f) is normalized to unity at mid band (maximum-response frequency), H (fo) = 1.
- The bandwidth Bn is called the **<u>noise bandwidth</u>** and is the bandwidth of an equivalent rectangular filter whose noise-power output is the same as the filter with characteristic H (f).

- The 3-dB bandwidth is defined as the separation in hertz between the points on the frequency-response characteristic where the response is reduced to 0.707 (3 dB) from its maximum value.
- The 3-dB bandwidth is widely used, since it is easy to measure. The measurement of noise bandwidth however, involves a complete knowledge of the response characteristic H (f).
- The frequency-response characteristics of many practical radar receivers are such that the 3-dB and the noise bandwidths do not differ appreciably.
- Therefore the 3-dB bandwidth may be used in many cases as an approximation to the noise bandwidth.
- The noise power in practical receivers is often greater than can be accounted for by thermal noise alone.
- The additional noise components are due to mechanisms other than the thermal agitation of the conduction electrons.
- The exact origin of the extra noise components is not important except to know that it exists. No matter whether the noise is generated by a thermal mechanism or by some

other mechanism, the total noise at the output of the receiver may be considered to be equal to the thermal-noise power obtained from an" ideal" receiver multiplied by a factor called the noise figure. The noise figure Fn of a receiver is defined by the equation;

$$F_n = \frac{N_o}{kT_0 B_n G_a} = \frac{\text{noise out of practical receiver}}{\text{noise out of ideal receiver at std temp } T_0}$$

- Where No = noise output from receiver, and Ga = available gain. The standard temperature T is taken to be 290 K,
- The noise No is measured over the linear portion of the receiver input-output characteristic, usually at the output of the IF amplifier before the nonlinear second detector.
- The receiver bandwidth Bn is that of the IF amplifier in most receivers. The available gain Ga is the ratio of the signal out So to the signal in Si, and kToBn is the input noise Ni in an ideal receiver. Equation above may be rewritten as;

$$F_n = \frac{S_i/N_i}{S_o/N_o}$$

- The noise figure may be interpreted, therefore, as a measure of the degradation of signal-to noise ratio as the signal passes through the receiver.

- The noise figure may be interpreted, therefore, as a measure of the degradation of signal-to noise ratio as the signal passes through the receiver.
- Rearranging Eq. above the input signal may be expressed as;

$$S_i = \frac{kT_0 B_n F_n S_o}{N_o}$$

- If the minimum detectable signal Smin, is that value of Si corresponding to the minimum ratio of output (IF) signal-to-noise ratio (So /No)min necessary for detection, then,

$$S_{min} = kT_0 B_n F_n \left(\frac{S_o}{N_o}\right)_{min}$$

- Substituting Eq. discussed above into Eq. earlier results in the following form of the radar equation:

$$R^4_{max} = \frac{P_t G A_e \sigma}{(4\pi)^2 k T_0 B_n F_n (S_o/N_o)_{min}}$$

Matched Filter Impulse Response

- The frequency response of matched filter is given by;

$$H(f) = G_a S^*(f) \exp(-j2\pi f t_1)$$

where $S(f) = \int_{-\infty}^{\infty} s(t) \exp(-j2\pi f t)\, dt$ = voltage spectrum (Fourier transform) of input signal

$S^*(f)$ = complex conjugate of $S(f)$

t_1 = fixed value of time at which signal is observed to be maximum

G_a = constant equal to maximum filter gain (generally taken to be unity)

- The matched filter may also be specified by its impulse response h(t), which is the inverse Fourier transform of the frequency-response function H(f) is as below;

$$h(t) = \int_{-\infty}^{\infty} H(f) \exp(j2\pi f t)\, df$$

- Physically, the impulse response is the output of the filter as a function of time when the input is an impulse (delta function).

$$h(t) = G_a \int_{-\infty}^{\infty} S^*(f) \exp[-j2\pi f(t_1 - t)]\, df$$

Since $S^*(f) = S(-f)$, we have

$$h(t) = G_a \int_{-\infty}^{\infty} S(f) \exp[j2\pi f(t_1 - t)]\, df = G_a s(t_1 - t)$$

- A rather interesting result is that the impulse response of the matched filter is the image of the received waveform; that is, it is the same as the received signal run backward in time starting from the fixed time t_1.

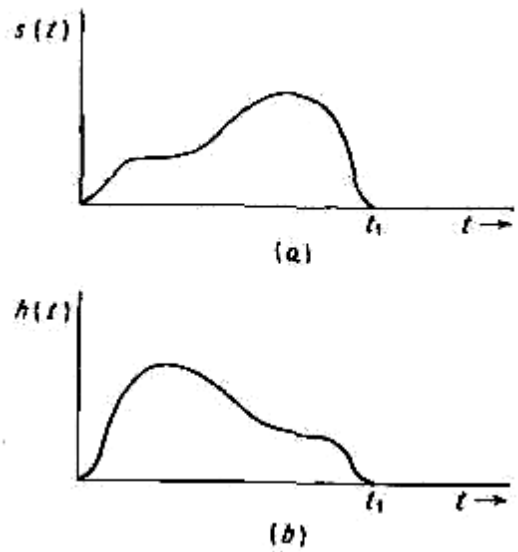

Figure 5.1. (a) Received waveform s(t); (b) impulse response h(t) of the matched filter.

- Figure 5.1 shows a received waveform s (t) and the impulse response h (t) of its matched filter. The impulse response of the filter, if it is to be realizable, is not defined for t < 0. (One cannot have any response before the impulse is applied.)
- Therefore we must always have $t < t_1$. This is equivalent to the condition placed on the transfer function H(f) that there be a phase shift exp $(-j2\Pi f t_1)$.
- However, for the sake of convenience, the impulse response of the matched filter is sometimes written simply as s (-t).

Integration of radar Pulses

- Many pulses are usually returned from any particular target on each radar scan and can be used to improve detection. The number of pulses n_B returned from a point target as the radar antenna scans through its beam width is;

$$n_B = \frac{\theta_B f_p}{\dot{\theta}_s} = \frac{\theta_B f_p}{6\omega_m}$$

where θ_B = antenna beamwidth, deg
f_p = pulse repetition frequency, Hz
$\dot{\theta}_s$ = antenna scanning rate, deg/s
ω_m = antenna scan rate, rpm

- Typical parameters for a ground-based search radar might be pulse repetition frequency, 1.5° beam width, and antenna scan rate 5 rpm (30°/s). These parameters result in 15 hits from a point target on each scan.

- The process of summing all the radar echo pulses for the purpose of improving detection is **called integration**.
- Many techniques might be employed for accomplishing integration. All practical integration techniques employ some sort of storage device. Perhaps the most common radar integration method is the cathode-ray-tube display combined with the integrating properties of the eye and brain of the radar operator.
- Integration may be accomplished in the radar receiver either before the second detector (in the IF) or after the second detector (in the video). A definite distinction must be made between these two cases.
- Integration before the detector is **called pre-detection**, or coherent, integration, while integration after the detector is **called post-detection**, or non-coherent, integration. Pre-detection integration requires that the phase of the echo signal be preserved if full benefit is to be obtained from the summing process.
- On the other hand, phase information is destroyed by the second detector; hence post-detection integration is no concerned with preserving RF phase. For this convenience, post-detection integration is not as efficient as pre-detection integration.

- If n pulses, all of the same signal-to-noise ratio, were integrated by an ideal pre-detection integrator, the resultant, or integrated, signal-to-noise (power) ratio would be exactly n times that of a single pulse.
- If the same n pulses were integrated by an ideal post-detection device, the resultant signal-to-noise ratio would be less than n times that of a single pulse.
- This loss in integration efficiency is caused by the nonlinear action of the second detector, which converts some of the signal energy to noise energy in the rectification process.
- The comparison of pre-detection and post-detection integration may be briefly summarized by stating that although post-detection integration is not as efficient as pre-detection integration, it is easier to implement in most applications.
- Post detection integration is therefore preferred, even though the integrated signal-to-noise ratio may not be as great. An alert, trained operator viewing a properly designed cathode-ray tube display is a close approximation to the theoretical post-detection integrator.
- The efficiency of post-detection integration relative to ideal pre-detection integration has been computed by Marcum when all pulses are of equal amplitude. The integration efficiency may be defined as follows:

$$E_i(n) = \frac{(S/N)_1}{n(S/N)_n}$$

- (S/N)1 = value of signal-to-noise ratio of a single pulse required to produce given probability of detection (for n = 1).
- (S/N)n = value of signal-to-noise ratio per pulse required to produce same probability of detection when n pulses are integrated.
- The improvement in the signal-to-noise ratio when n pulses are integrated post detection is nEi(n) and is the **integration-improvement factor.**
- The radar equation with n pulses integrated can be written as;

$$R^4_{max} = \frac{P_t G A_e \sigma}{(4\pi)^2 k T_0 B_n F_n (S/N)_n}$$

$$R^4_{max} = \frac{P_t G A_e \sigma n E_i(n)}{(4\pi)^2 k T_0 B_n F_n (S/N)_1}$$

Radar Cross Section of Target

- Radar cross section is a property of a scattering object or target that is included in the radar eq. to represent the echo signal returned to the radar by target.

$$\text{Power density of echo signal at radar} = \frac{P_t G}{4\pi R^2}\frac{\sigma}{4\pi R^2}$$

- **in other terms,**

$$\sigma = \frac{\text{power reflected toward source/unit solid angle}}{\text{incident power density}/4\pi} = \lim_{R\to\infty} 4\pi R^2 \left|\frac{E_r}{E_i}\right|^2$$

where R = distance between radar and target
E_r = reflected field strength at radar
E_i = strength of incident field at target

- The radar cross section of a target is the (fictional) area intercepting that amount of power which, when scattered equally in all directions.
- Scattering and diffraction are variations of the same physical process.
- When an object scatters an electromagnetic wave, the scattered field is defined as the difference between the total field in the presence of the object and the field that would exist if the object were absent (but with the sources unchanged). On the other hand, the diffracted field is the total field in the presence of the object.

- With radar backscatter, the two fields are the same, and one may talk about scattering and diffraction interchangeably.
- The scattered field, and hence the radar cross section, can be determined by solving Maxwell's equations with the proper boundary conditions applied.
- Unfortunately, the determination of the radar cross section with Maxwell's equations can be accomplished only for the most simple of shapes, and solutions valid over a large range of frequencies are not easy to obtain. The radar cross section of a simple sphere is shown in Fig. 6.1
- The region where the size of the sphere is small compared with the wavelength $2\pi a/\lambda << 1$ is called the Rayleigh region, after Lord Rayleigh who, in the early 1870 first studied scattering by small particles.
- Lord Rayleigh was interested in the scattering of light by microscopic particles, rather than in radar.
- The cross section of objects within the Rayleigh region varies as λ^{-4}.

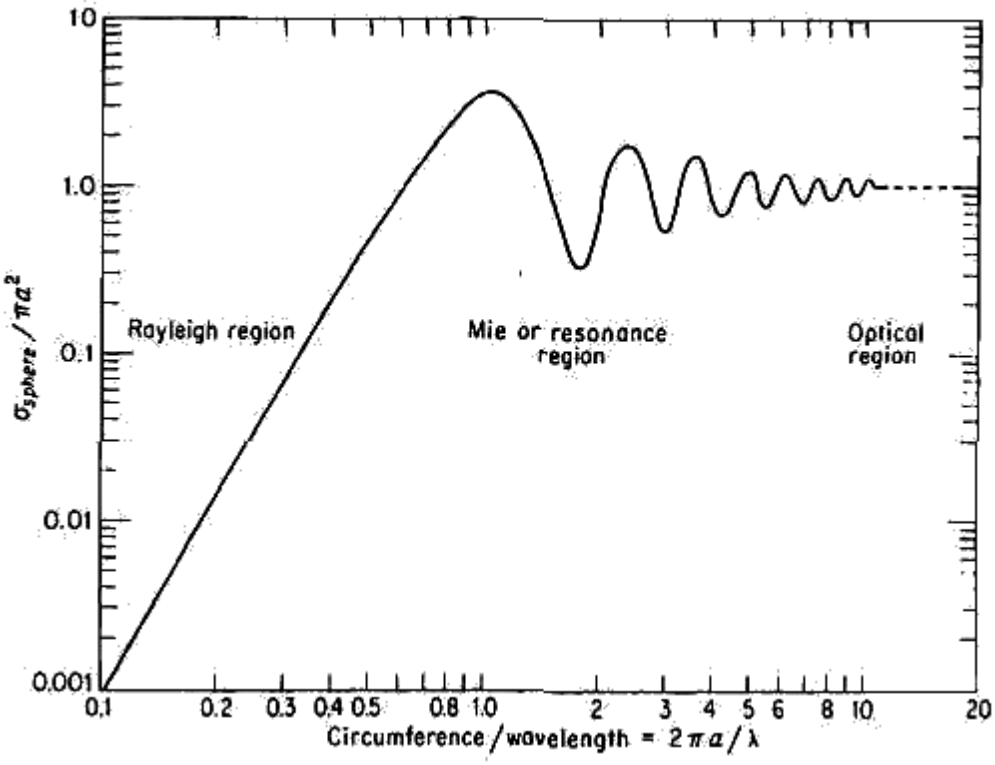

Figure 6.1. Radar cross section of the sphere. a = radius; λ = wavelength

- Rain and Clouds are essentially invisible to radars which operate at relatively long wavelengths (low frequencies).
- The usual radar targets are much larger than raindrops or cloud particles, and lowering the radar frequency to the point where rain or cloud echoes are negligibly small will not seriously reduce the cross section of the larger desired targets.

- On the other hand, if it were desired to actually observe, rather than eliminate, raindrop echoes, as in a meteorological or weather-observing radar, the higher radar frequencies would be preferred.
- At the other extreme from the Rayleigh region is the optical region, where the dimensions of the sphere are large compared with the wavelength $2\pi a/\lambda >> 1$.
- For large $2\pi a/\lambda$ the radar cross section approaches the optical cross section πa^2.
- In between the optical and the Rayleigh region is the Mie or resonance, region.
- The maximum value is 5.6 dB greater than the optical value, while the value of the first null is 5.5 dB below the optical value.
- **<u>COMPLEX TARGET:-</u>**
- The radar cross section of complex targets such as ships, aircraft, cities, and terrain are complicated functions of the viewing aspect and the radar frequency.
- A complex target may be considered as comprising a large number of independent objects that scatter energy in all directions.

- The relative phases and amplitudes of the echo signals from the individual scattering objects as measured at the radar receiver determine the total cross section.
- The phases and amplitudes of the individual signals might add to give a large total cross section, or the relationships with one another might result in total cancellation.
- In general, the behaviour is somewhere between total reinforcement and total cancellation.
- If the separation between the individual scattering objects is large compared with the wavelength-and this is usually true for most radar applications-the phases of the individual signals at the radar receiver will vary as the viewing aspect is changed and cause a scintillating echo.
- Consider the scattering from a relatively "simple" complex target consisting of two equal, isotropic objects (such as spheres) separated by a distance l.

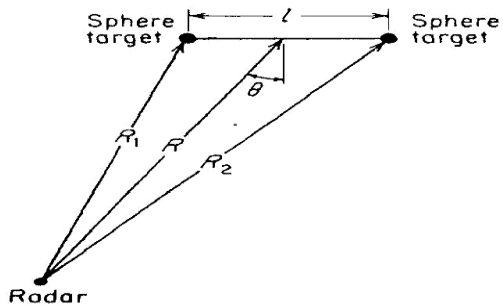

- The separation l <= cτ/2.

Where, c = velocity of propagation and

τ = pulse duration.

Another restriction placed on l is that it be small compared with the distance R from radar to target.

- Furthermore, $R_1 = R_2 = R$
- The cross sections of the two targets are assumed equal and are designated σ_0.
- The composite cross section σ_r, of the two scatterers is The ratio σ_r / σ_0 ;

$$\frac{\sigma_r}{\sigma_0} = 2\left[1 + \cos\left(\frac{4\pi l}{\lambda}\sin\theta\right)\right]$$

- σ_r / σ_0 can be anything from a minimum of zero to a maximum of four times the cross section of an individual scatterer.

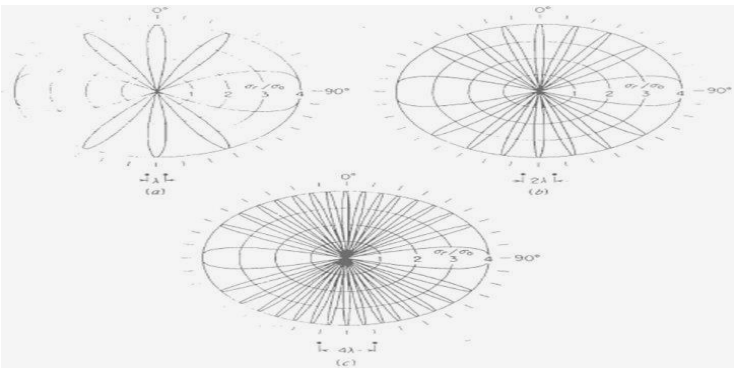

Figure 6.2. Polar plot of σ_r / σ_0 for complex target (a) l= λ (b) l=2λ (c) l= 4λ

Cross section Fluctuations

- The discussion of the minimum signal-to-noise ratio assumed that the echo signal received from a particular target did not vary with time.
- However, the echo signal from a target in motion is almost never constant.
- Variations in the echo signal may be caused by meteorological conditions, the lobe structure of the antenna pattern, equipment instabilities, or variations in the target cross section.
- For larger target (complex target) echo scattering center has an amplitude & phase that is independent of the amplitude & phase is different from other scattering centers.
- One straightforward method for a fluctuating radar cross section is to select small value of cross section which has high probability of being exceeded of all the time.
- Another method is based on probability density function (PDF).
- It gives value between σ and dσ.
- In addition to PDF the variation of cross section fluctuation is done with time.
- The variation of cross section fluctuation is differ from receiver noise means receiver noise is independent from the pulse to pulse.

SWERLING TARGET MODELS:-

Case 1:-

- The echo pulses received from a target on any one scan are of constant amplitude throughout the entire scan but are independent (uncorrelated) from scan to scan.
- An echo fluctuation of this type will be referred to as scan-to-scan fluctuation.
- The probability - density function for the cross section σ is;

$$p(\sigma) = \frac{1}{\sigma_{av}} \exp\left(-\frac{\sigma}{\sigma_{av}}\right) \qquad \sigma \geq 0$$

Case 2:-

- The PDF for the target cross section is also given by

$$p(\sigma) = \frac{1}{\sigma_{av}} \exp\left(-\frac{\sigma}{\sigma_{av}}\right) \qquad \sigma \geq 0$$

- But the fluctuation is more rapid than in case1 and are taken to be independent from pulse to pulse instead of from scan to scan.

Case 3:-

- In this case the fluctuation is assumed to be independent from the scan to scan as in case 1 but the PDF is given by;

$$p(\sigma) = \frac{4\sigma}{\sigma_{av}^2} \exp\left(-\frac{2\sigma}{\sigma_{av}}\right)$$

Case 4:-

- The fluctuation for pulse to pulse is same as case 3.
- Pulse to pulse change in frequency is called **freq. agility**.
- The probability-density function assumed in cases 1 and 2 applies to a complex target consisting of many independent scatterers of approximately equal echoing areas.
- Cases 3 and 4 is more indicative of targets that can be represented as one large reflector together with other small reflectors.
- For purposes of comparison, the non-fluctuating cross section will be called ***case 5***.

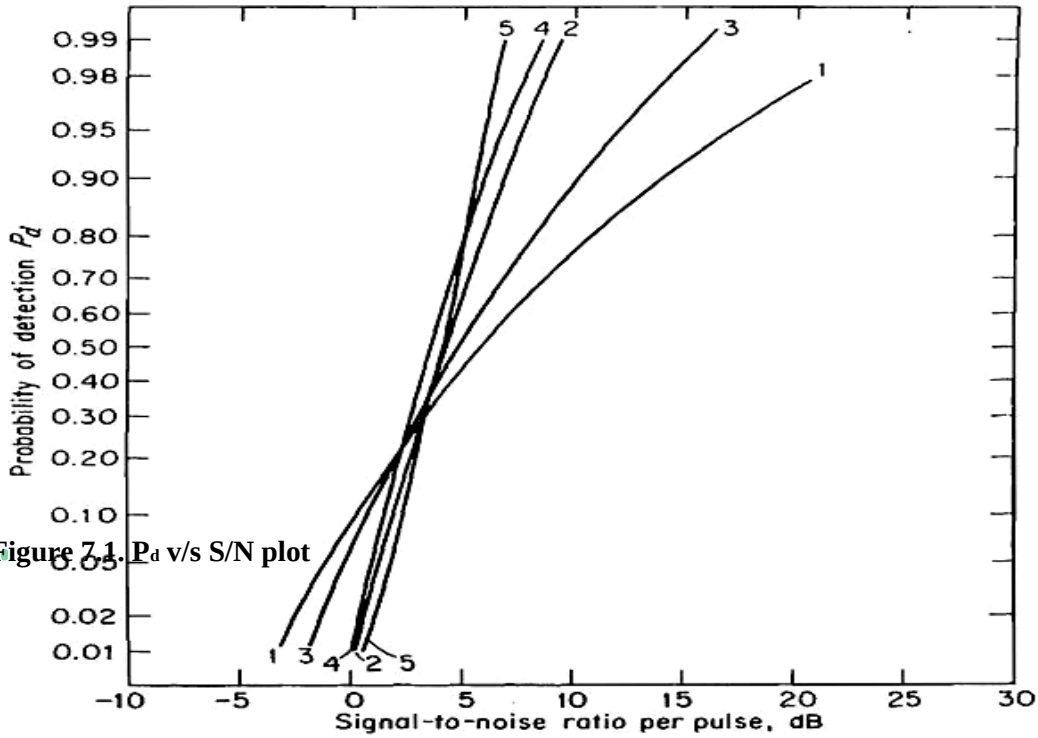

Figure 7.1. P_d v/s S/N plot

UNIT 2
CW & FMCW RADAR

Transmitter Power

- The power Pt in radar range eq. is called peak power

$$R_{max} = \left[\frac{P_t G A_e \sigma}{(4\pi)^2 S_{min}}\right]^{1/4}$$

- The peak pulse power as used in the radar equation is not the instantaneous peak power of a sine wave.
- It is defined as the power averaged over that carrier-frequency cycle which occurs at the maximum of the pulse of power.
- If the transmitted waveform is a train of rectangular pulses of width τ and pulse-repetition period Tp = 1/ f p , the average Power is related to the peak power by,

$$P_{av} = \frac{P_t \tau}{T_p} = P_t \tau f_p$$

- The ratio Pav/Pt, τ/Tp, or τfp is called the duty cycle of the radar.

$$R^4_{max} = \frac{P_{av} G A_e \sigma n E_i(n)}{(4\pi)^2 k T_0 F_n (B_n \tau)(S/N)_1 f_p}$$

$$E_\tau = P_{av}/f_p$$

$$R^4_{max} = \frac{E_\tau G A_e \sigma n E_i(n)}{(4\pi)^2 k T_0 F_n (B_n \tau)(S/N)_1}$$

Where E_i = Total energy of the n pulses which is equals to nE_p.

Pulse Repetition Frequency and Range Ambiguities

- The pulse repetition freq.(prf) is determined primarily by the maximum range at which targets are expected.
- If the prf is made too high , the likelihood of obtaining target echoes from the wrong pulse transmission is increased.
- Echo signal received after an interval exceeding the pulse-repetition period are called ***multiple time around echoes.***
- Now consider the three targets labeled ***A, B, and C in Fig.***

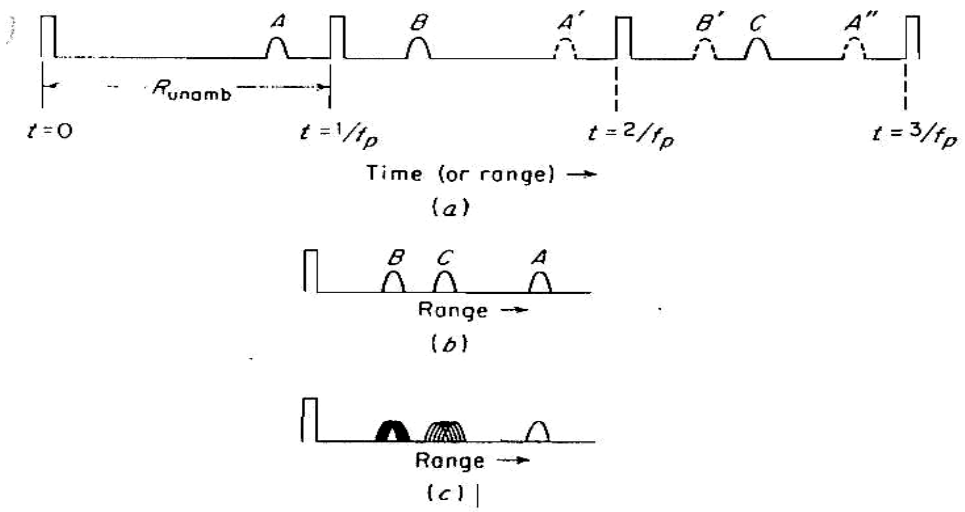

- Target A is located within the maximum unambiguous range R_{unam}b of the radar,
- target B is at a distance greater than Runamb but less than 2RUnamb
- while target C is greater the $2R_{unabm}$ but less than $3R_{Unamb}$ The appearance of the three targets on an A-scope is sketched in Fig. c
- The multiple-time-around echoes on the A-scope cannot be distinguished from proper target echoes actually within the maximum unambiguous range.
- Only the range measured for target A is correct; those for B and C are not.
- One method of distinguishing multiple-time-around echoes from unambiguous echoes is to operate with a varying pulse repetition frequency.
- $R_{true} = f_1$ or (f_1+R_{un1}) or (f_1+R_{un2}) or …
- The correct range is that value which is the same with the two PRF, generally three PRF are often use to resolve range ambiguities.

➢

System Losses

- The important factors omitted from the simple radar equation was the losses that occurs throughout the radar system.
- System losses define by L_s.
- Loss (number greater than unity) and efficiency (number less than unity) are used interchangeably. One is simply the reciprocal of the other.
- **Losses occurs due to,**
  1. Loss due to integration.
  2. Loss due to fluctuating cross section.
  3. Loss due to change in radar cross section of target.
  4. Losses due to transmission line.
  5. Losses due to various mechanical part of radar system
- **Types of losses:-**
  1. Microwave plumbing loss.
  2. Duplexer loss.
  3. Antenna loss.
  4. Scanning loss.
  5. Radome.
  6. Signal processing loss.
  7. Loss in Doppler processing radar.
  8. Collapsing loss.
  9. Operator loss.
  10. Equipment degradation.
  11. Transmission loss.
  12. Radar system losses- the seller and the buyer.
  13. Propagation effect

- **Microwave plumbing loss:-**
  - There is always loss in transmission line that connect Transmitter and Reciever
  - In addition there can be loss in the various microwave components such as duplexer, receiver protector, directional coupler, transmission line connector, bend in transmission line, etc.
- **Duplexer loss:-**
  - The loss due to duplexer that is protect Transmitter and Reciever
  - Eg. Gas duplexer, solid state duplexer.
- **Antenna loss:-**
  - **Beam shape loss.**
  - The antenna gain that appears in the radar equation was assumed to be a constant equal to the maximum value.
  - But in reality the train of pulses returned from a target with a scanning radar is modulated in amplitude by the shape of the antenna beam.
- **Scanning loss:-**
  - When the antenna scan rapidly enough, relative to the round trip time of the echo signal, the antenna gain in the direction of target on transmit might not be the same as that on receive.
  - This result in an additional loss called scanning loss.

- **Phased array losses:-**
  - Some phased array radar have additional transmission losses due to the distribution n/w that connects RX and Transmitter to each of the many element of array.
- **Signal processing loss:-**
  - Sophisticated signal processing is prevalent in modern radars and is very important for detecting target in clutter and in extracting information from radar echo signals.
- **The factor described below can also introduced significant loss:**
  1. Matched & Non-matched filter
  2. Constant false alarm
  3. Automatic integrator
  4. Threshold level
  5. Limiting loss

     Eg. Pulse compression processing to remove amplitude fluctuation.
  6. Sampling loss
- **Losses in Doppler processing radar:-**
  - This kind of loss occur due to Doppler frequency.

- **Collapsing loss:-**
  - If the radar were to integrate additional noise sample along with signal-pulse-noise pulses, the added noise would result in a degradation called **collapsing loss.**
- **Operator loss:-**
  - An alert, motivated, and well-trained operator should perform as well as described by theory.
  - However, when distracted, tired, overloaded, or not properly trained, operator performance will decrease.
  - There is little guidance available on how to account for the performance of an operator.
  - Based an both empirical and experimental results, one gives the operator efficiency factor as

$$\rho_0 = 0.7(P_d)^2$$

- **Equipment degradation:-**
  - It is common for radar operated under field conditions to have performance than when they left the factory.
  - This loss of performance can be recognized by regular testing the radar, especially with built in test equipment that automatically indicating when equipment deviates from specifications.

- **Transmission loss:-**
  - The theoretical one way loss in db per 100 feet for standard transmission line.
  - Since the same transmission line generally is used for transmission and reception, so the loss to be inserted in the radar eq. is twice the one-way loss.
  - Flexible waveguide and coaxial line can have higher loss compare to conventional waveguide.
  - At lower freq. transmission line introduce less loss.
  - At higher freq. transmission line introduce more loss.
  - Connection loss is also present in transmission line.
- **Radar system losses- the seller & the buyer:-**
  - There is no universally agreed upon procedure for determining system losses or what losses should be considered when predicting radar performance.

Doppler Effect

- A radar detects the presence of objects and locates their position in space by transmitting electromagnetic energy and observing the returned echo. A pulse radar transmits a relatively short burst of electromagnetic energy, after which the receiver is turned on to listen for the echo.
- The echo not only indicates that a target is present, but the time that elapses between the transmission of the pulse and the receipt of the echo is a measure of the distance to the target.
- Separation of the echo signal and the transmitted signal is made on the basis of differences in time. The radar transmitter may be operated continuously rather than pulsed if the strong transmitted signal can be separated from the weak echo.
- The received-echo-signal power is considerably smaller than the transmitter power; it might be as little as 10^{-18} that of the transmitted power-sometimes even less. Separate antennas for transmission and reception help segregate the weak echo from the strong leakage signal, but the isolation is usually not sufficient.
- A feasible technique for separating the received signal from the transmitted signal when there is relative motion between radar and target is based on recognizing the change in the echo-signal frequency caused by the Doppler effect.

- It is well known in the fields of optics and acoustics that if either the source of oscillation or the observer of the oscillation is in motion, an apparent shift in frequency will result. This is the Doppler Effect and is the basis of CW radar.
- If R is the distance from the radar to target, tile total number of wavelengths λ contained in the two-way path between the radar and the target is 2R / λ.
- The distance R and the wavelength λ are assumed to be measured in the same units. Since one wavelength corresponds to an angular excursion of 2π radians, the total angular excursion φ made by the electromagnetic wave during its transit to and from the target is 4πR / λ radians.
- If the target is in motion, R and the phase φ are continually changing. A change in φ with respect to time is equal to a frequency.
- This is the Doppler angular frequency ωd given by;

$$\omega_d = 2\pi f_d = d\varphi / dt$$

$$\frac{4\pi}{\lambda}\frac{dR}{dt} = \frac{4\pi v_r}{\lambda}$$

f_d = Doppler frequency shift

v_r = relative (or radial) velocity of target with to radar.

- The Doppler frequency shift is

$$f_d = 2 * v_r / \lambda = 2 * v_r * f_o / c$$

Where, f_o = transmitted frequency

c = velocity of propagation = 3 x 10_8 m/s.

If f_d is in hertz v_r in knots, and λ in meters,

$$f_d = 1.03 * v_r / \lambda$$

- A plot of this equation is shown in below figure.

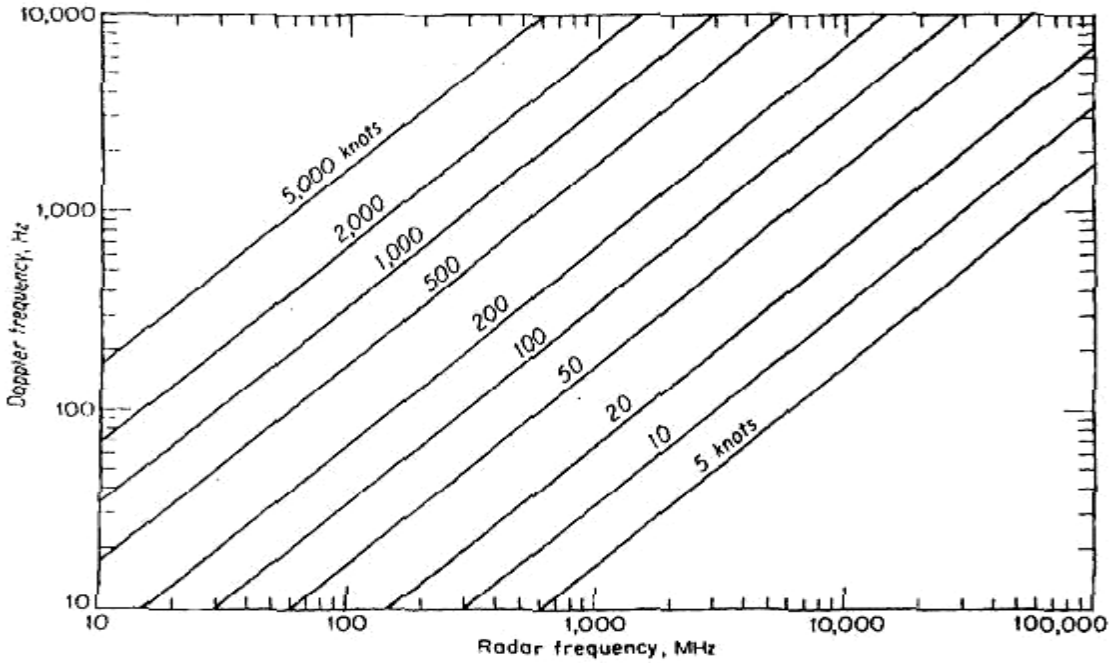

- The relative velocity may be written $v_r = v \cos \theta$, where v is the target speed and θ is the angle made by the target trajectory and the line joining radar and target. When θ = 0. The Doppler frequency is maximum. The Doppler is zero when the trajectory is perpendicular to the radar line of sight (θ = 90°).

CW Radar

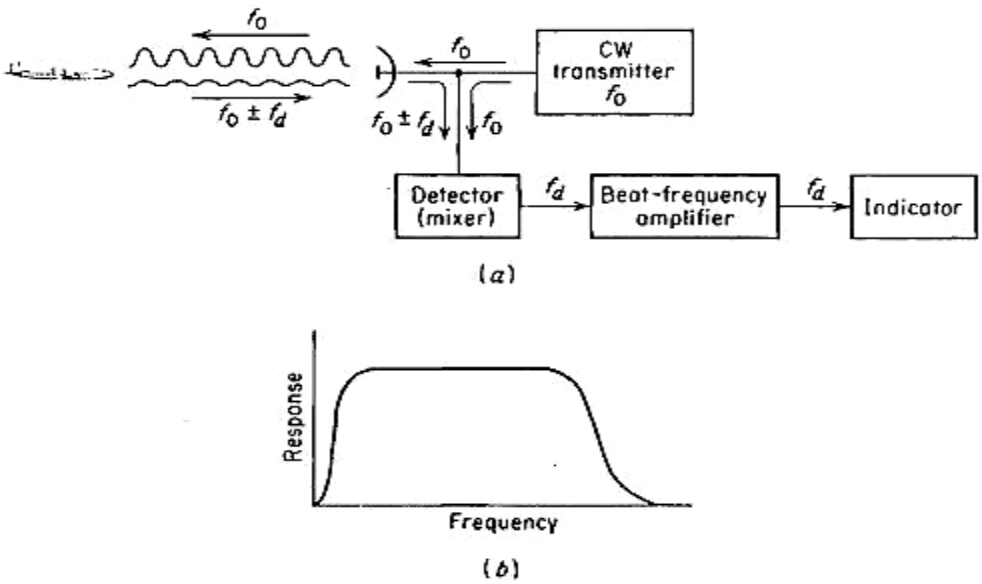

Fig. 16.1 (a) Simple CW radar block diagram; (b) response characteristic of beat-frequency amplifier

- Consider the simple CW radar as illustrated by the block diagram of Fig. 16.1. The transmitter generates a continuous (unmodulated) oscillation of frequency f_o, which is radiated by the antenna.
- A portion of the radiated energy is intercepted by the target and is scattered, some of it in the direction of the radar, where it is collected by the receiving antenna. If the target is in motion with a velocity *vr*, relative to the radar, the received signal will be shifted in frequency from the transmitted frequency f_o by an amount $\pm f_d$ as given by $f_d = 2 * v_r / \lambda$.

- The plus sign associated with the doppler frequency applies if the distance between target and radar is decreasing (closing target), that is, when the received signal frequency is greater than the transmitted signal frequency.
- The minus sign applies if the distance is increasing (receding target). The received echo signal at a frequency $f_0 \pm f_d$ enters the radar via the antenna and is heterodyned in the detector (mixer) with a portion of the transmitter signal f_o to produce a doppler beat note of frequency f_d. The sign of f_d is lost in this process.
- The purpose of the doppler amplifier is to eliminate echoes from stationary targets and to amplify the doppler echo signal to a level where it can operate an indicating device. It might have a frequency-response characteristic similar to that of Fig. 16.1(b).
- The low-frequency cutoff must be high enough to reject tile d-c component caused by stationary targets, but yet it might be low enough to pass the smallest doppler frequency expected. Sometimes both conditions cannot be met simultaneously and a compromise is necessary. The upper cutoff frequency is selected to pass the highest doppler frequency expected.

- The indicator might be a pair of earphones or a frequency meter. If exact knowledge of the doppler frequency is not necessary, earphones are especially attractive provided the doppler frequencies lie within the audio-frequency response of the ear. Earphones are not only simple devices. but the ear acts as a selective bandpass filter with a passband of the order of 50 Hz centered about the signal frequency.

Isolation between Transmitter and Receiver:-

- Isolation between the transmitted and the received signals is achieved via separation in frequency as a result of the doppler effect.
- In practice, it is not possible to eliminate completely the transmitter leakage. However, transmitter leakage is not always undesirable.
- A moderate amount of leakage entering the receiver along with the echo signal supplies the reference necessary for the detection of the doppler frequency shift.
- There are two practical effects which limit the amount of transmitter leakage power which can be tolerated at the receiver. These are
  1. The maximum amount of power the receiver input circuitry can withstand before it is physically damaged or its sensitivity reduced (burnout) and
  2. The amount of transmitter noise due to hum, micro phonics, stray pick-up, and instability which enters the receiver from the transmitter.
- The additional noise introduced by the transmitter reduces the receiver sensitivity.

- The amount of isolation required depends on the transmitter power and the accompanying Transmitter noise as well as the ruggedness and the sensitivity of the receiver.
- The transmitter noise that enters the radar receiver via backscatter from the clutter is sometimes called **transmitted clutter.**

Intermediate Frequency Receiver:-

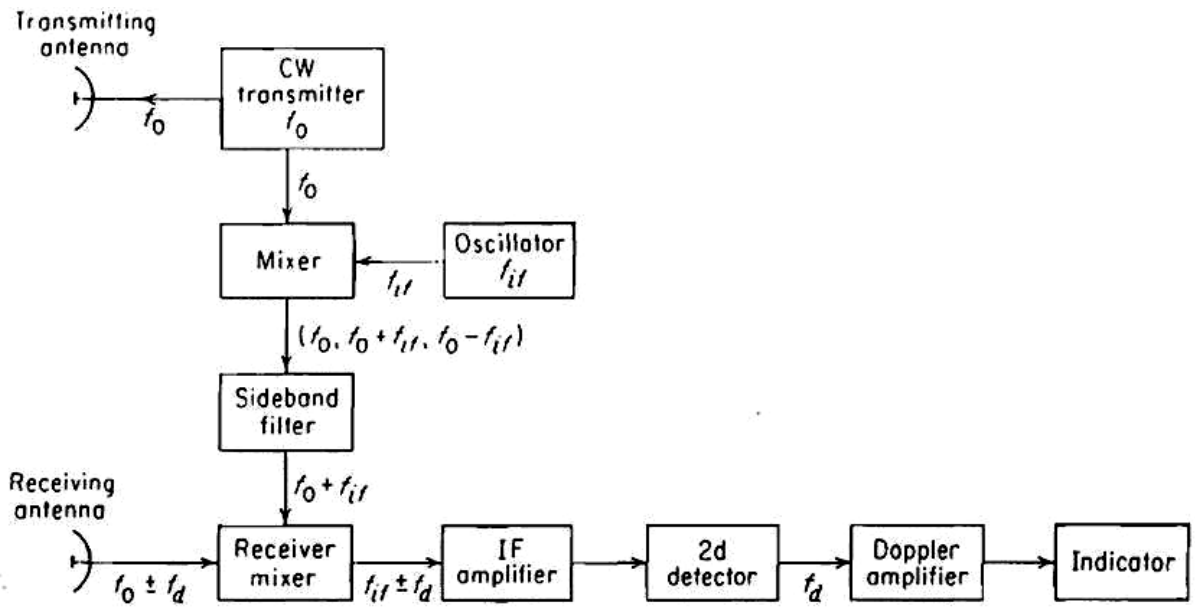

Figure 16.2. Block diagram of Doppler radar with IF receiver (sideband superheterodyne)

- CW type receivers are called homodyne receivers, or super heterodyne receivers with zero IF.
- The function of the local oscillator is replaced by the leakage signal from the transmitter.
- The simpler receiver is not as sensitive because of increased noise at the lower intermediate frequencies caused by **flicker effect.**
- Flicker-effect noise occurs in **semiconductor devices such as diode detectors and cathodes of vacuum tubes.**
- The noise power produced by the flicker effect varies as $\mathbf{1/f^{\alpha}}$ where alpha is approximately unity.
- This is in contrast to shot noise or thermal noise, which is independent of frequency.
- Generally flicker noise would be high at lower freq.
- Due to flicker noise receiver sensitivity decreases.
- The effects of **flicker noise overcome** in the normal super heterodyne receiver by using an **intermediate frequency high enough, increase Transmitter power, or increase antenna aperture.**
- Instead of the usual local oscillator found in the conventional super heterodyne receiver, the local oscillator (or reference signal) is derived in the receiver from a portion of the transmitted signal mixed with a locally generated signal of frequency equal to that of the receiver IF.

- Since the output of the mixer consists of two sidebands on either side of the carrier plus higher harmonics, a narrowband filter selects one of the sidebands as the reference signal.
- The improvement in receiver sensitivity with an intermediate-frequency super heterodyne might be as much as 30 dB over the simple receiver.

Receiver Bandwidth:-

- One of the requirements of the doppler-frequency amplifier in the simple CW radar or the IF amplifier of the sideband super heterodyne is that it be **wide enough to pass the expected range of doppler frequencies.**
- In most cases of practical interest the expected range of doppler frequencies will be much wider than the frequency spectrum occupied by the signal energy.
- The use of a wideband amplifier covering the expected doppler range will result in an increase in noise and a lowering of the receiver sensitivity.
- If the frequency of the doppler-shifted echo signal were known beforehand,
  1. A narrowband filter-one just wide enough to reduce the excess noise without eliminating a significant amount of signal energy-might be used.
  2. Also matched filter could be specified as per requirement.

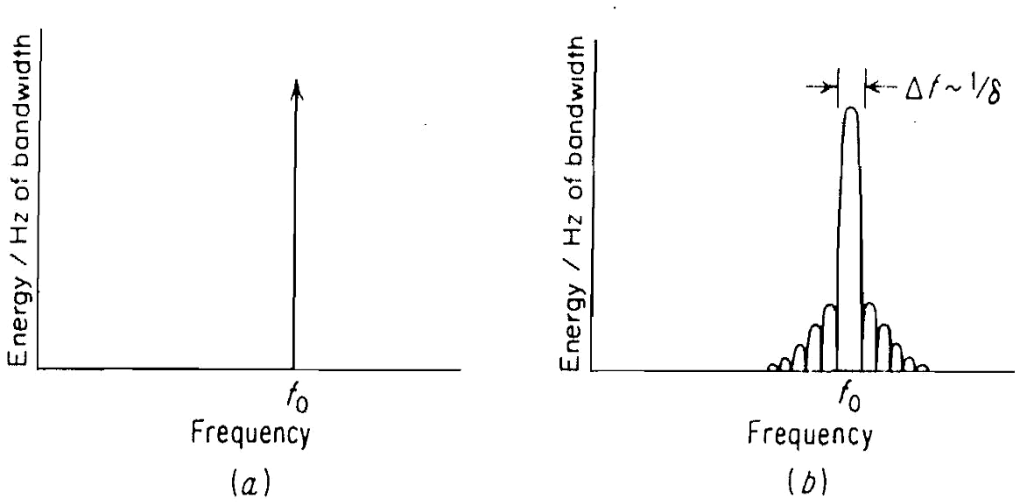

Figure 17.1. Frequency spectrum

- If the received waveform were a sine wave of infinite duration, its frequency spectrum would be a delta function (Fig. 17.1(a)) and the receiver bandwidth would be infinitesimal.
- But a sine wave of infinite duration and an infinitesimal bandwidth cannot occur in nature.
- The more normal situation is an echo signal which is a sine wave of finite rather than infinite duration.

- The frequency spectrum of a finite-duration sine wave has a shape of the form $\sin \pi(f - f_0)\Delta/\pi (f - f_0)$ where, f_0 and are the frequency and duration of the sine wave, respectively, and f is the frequency variable over which the spectrum is plotted (Fig. 17.1(b)).
- In many instances, the echo is not a pure sine wave of finite duration but is perturbed by fluctuations in cross section, target accelerations, scanning fluctuations, etc., which tend to broaden the bandwidth still further. Some of these spectrum-broadening effects are considered below.
- Assume a CW radar with an antenna beamwidth of Θ_B deg. scanning at the rate of Θ_S deg/s.
- The time on target (duration of the received signal) is = Θ_B / Θ_s sec. Thus the signal is of finite duration and the bandwidth of the receiver must be of the order of the reciprocal of the time on target Θ_B / Θ_s.
- Although this is not an exact relation, it is a good enough approximation for purposes of the present discussion.
- If the antenna beamwidth were 2^0 and if the scanning rate were 36^0/s (6 rpm), the spread in the spectrum of the received signal due to the finite time on target would be equal to 18 Hz, independent of the transmitted frequency.

- If the target's relative velocity is not constant, a further widening of the received signal spectrum can occur. If a_r is the acceleration of the target with respect to the radar, the signal will occupy a bandwidth;

$$\Delta f_d = \left(\frac{2a_r}{\lambda}\right)^{1/2}$$

Doppler Filter Bank:-

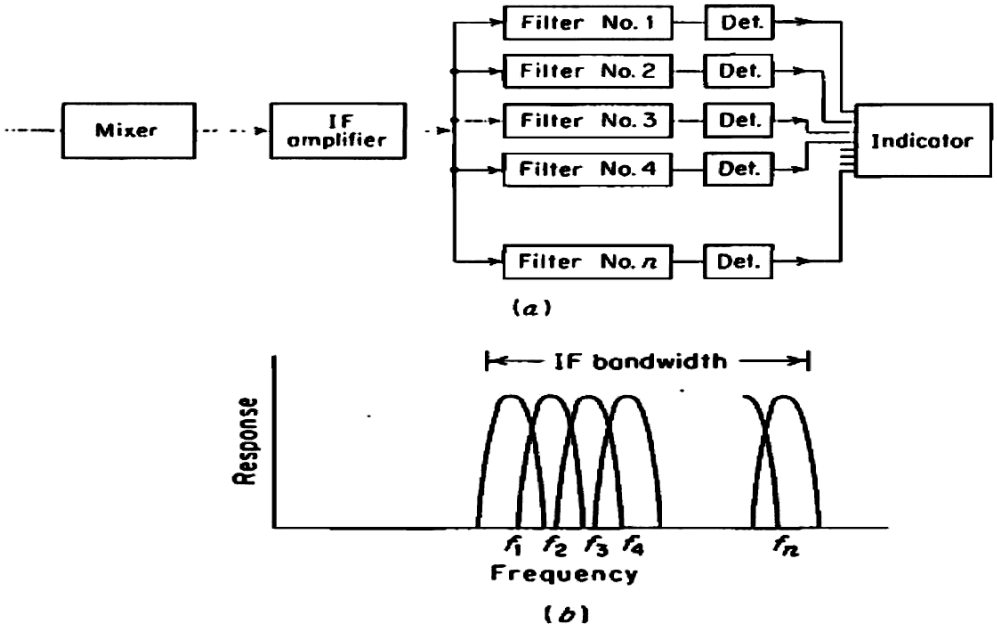

Figure 17.2. (a) Block diagram of IF doppler filter bank; (b) frequency-response characteristic of doppler filter bank.

- A relative wide band of frequencies called as bank of narrowband filters are used to measure the frequency of echo signal.
- When the doppler-shifted echo signal is known to lie somewhere within a relatively wide band of frequencies, a bank of narrowband filters (Fig. 17.2) spaced throughout the frequency range permits a measurement of frequency and improves the signal-to-noise ratio.
- The bandwidth of each individual filter is wide enough to accept the signal energy, but not so wide as to introduce more noise than need be. The center frequencies of the filters are staggered to cover the entire range of doppler frequencies.
- If the filters are spaced with their half-power points overlapped, the maximum reduction in signal-to-noise ratio of a signal lies midway between adjacent channels compared with the signal-to-noise ratio at band is 3 dB.
- The more filters used to cover the band, the less will be the maximum loss experienced, but the greater the probability of false alarm.
- A bank of narrowband filters may be used after the detector in the video of the simple CW radar instead of in the IF.

- The improvement in signal-to-noise ratio with a video filter bank is not as good as can be obtained with an IF filter bank, but the ability to measure the magnitude of doppler frequency is still preserved. Because of fold over, a frequency which lies to one side of the IF carrier appears, after detection, at the same video frequency as one which lies an equal amount on the other side of the IF.
- Therefore the sign of the doppler shift is lost with a video filter bank, and it cannot be directly determined whether the Doppler frequency corresponds to an approaching or to a receding target. (The sign of the doppler may be determined in the video by other means, as described later.) One advantage of the fold over in the video is that only half the number of filters are required than in the IF filter bank.

Application of CW Radar:-

1. Measurement of the relative velocity of a moving target, as in the police speed monitor or in the rate-of-climb meter for vertical-take-off aircraft.
2. Suggested for the control of traffic lights, regulation of toll booths, vehicle counting, as a replacement for the “fifth-wheel" speedometer in vehicle testing, as a sensor in antilock braking systems, and for collision avoidance.
3. For railways, CW radar can be used as a speedometer
4. CW radar is also employed for monitoring the docking speed of large ships.
5. It has also seen application for intruder alarms and for the measurement of the velocity of missiles, ammunition, and baseballs.
6. In industry this has been applied to the measurement of turbine-blade vibration, the peripheral speed of grinding wheels, and the monitoring of vibrations in the cables of suspension bridges.
7. High-power CW radars for the detection of aircraft and other targets have been developed and have been used in such systems as the Hawk missile systems.

Drawback of CW Radar:-

1. It cannot provide range of the target nor sense which particular cycle of oscillation is being received at any instant.

Frequency Modulated CW Radar (FMCW)

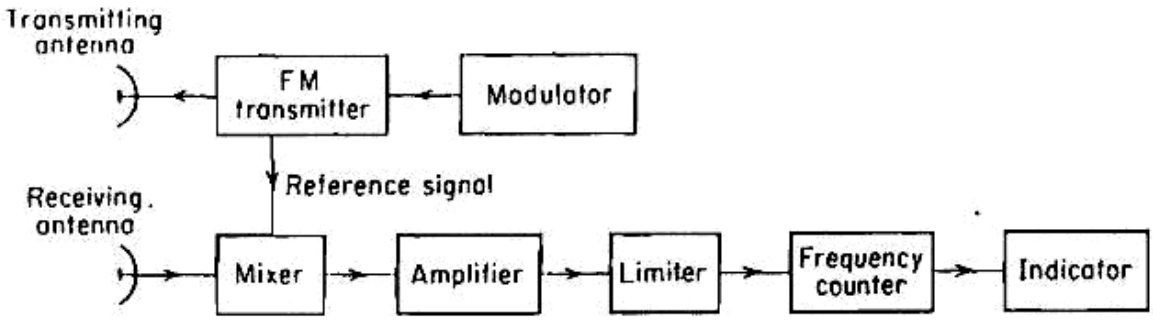

Figure 18.1. Block diagram of FMCW radar

- A portion of the transmitter signal acts as the reference signal required to produce the beat frequency. It is introduced directly into the receiver via a cable or other direct connection.
- Ideally the isolation between transmitting and receiving antennas is made sufficiently large so as to reduce to a negligible level the transmitter leakage signal which arrives at the receiver via the coupling between antennas.
- The beat frequency is amplified and limited to remove any amplitude fluctuations. The frequency of the amplitude-limited beat note is measured with a cycle-counting frequency meter calibrated in distance.

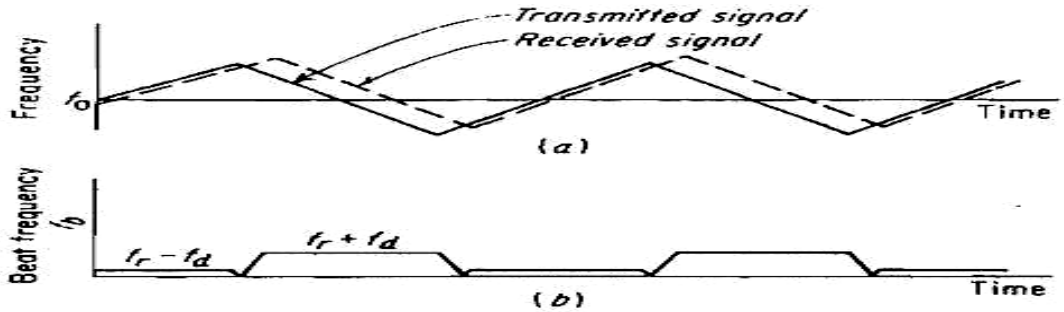

Figure 18.2. Frequency-time relation-ships in FM-CW radar when the fr + fd received signal is shifted in frequency by the doppler effect (a) Transmitted (solid curve) and echo (dashed curve); (b) beat frequency

- In the above, the target was assumed to be stationary. If this assumption is not applicable, a doppler frequency shift will be superimposed on the FM range beat note and an erroneous range measurement results.
- The doppler frequency shift causes the frequency-time plot of the echo signal to be shifted up or down (Fig. 18.2 (a)). On one portion of the frequency-modulation cycle the heat frequency (Fig, 18.2 (b)) is increased by the doppler shift, while on the other portion it is decreased.
- If for example, the target is approaching the radar, the beat frequency fb(up) produced during the increasing, or up, portion of the FM cycle will be the difference between the beat frequency due to the range fr, and the doppler frequency shift fd. Similarly, on the decreasing portion, the beat frequency, fb(down) is the sum of the two.

$$f_b(up) = f_r - f_d$$

$$f_b(down) = f_r + f_d$$

- The range frequency fr, may be extracted by measuring the average beat frequency; that is,

$$f_r = [f_b(up) + f_b(down)]/2$$

- If f_b(up) and f_b(down) are measured separately, for example, by switching a frequency counter every half modulation cycle, one-half the difference between the frequencies will yield the doppler frequency. This assumes $f_r > f_d$.
- If, on the other hand, $f_r < f_d$ such as might occur with a high-speed target at short range, the roles of the averaging and the difference-frequency measurements are reversed; the averaging meter will measure Doppler velocity, and the difference meter, range.
- If it is not known that the roles of the meters are reversed because of a change in the inequality sign between fr and fd an incorrect interpretation of the measurements may result.

Range and Doppler Measurement:-

- The frequency-modulated CW radar (abbreviated as FM-CW), the transmitter frequency is changed as a function of time in a known manner. Assume that the transmitter frequency increases linearly with time, as shown by the solid line in Fig. 18.3(a).

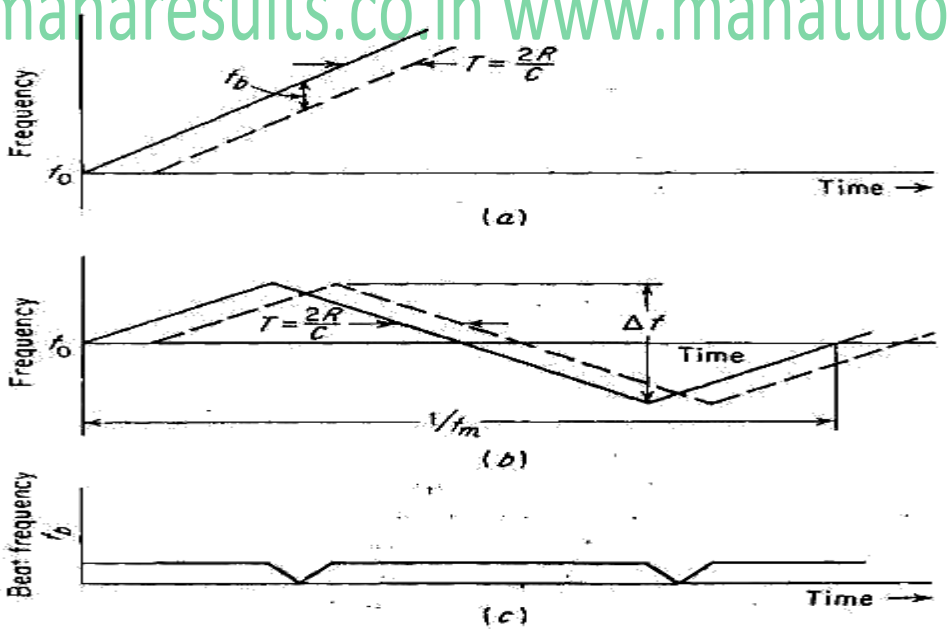

Figure 18.3. Frequency-time relationships in FM-CW radar. Solid curve represents transmitted signal, dashed curve represents echo. (a) Linear frequency modulation; (b) triangular frequency modulation; (c) beat note of (b)

- If there is no doppler frequency shift, the beat note (difference frequency) is a measure of the target's range and $f_b = f_r$ where f_r is the beat frequency due only to the target's range.

- If the rate of change of the carrier frequency is f_0, the beat frequency is

$$f_r = f_0 T = 2 R f_0 / c$$

- In any practical CW radar, the frequency cannot be continually changed in one direction only. Periodicity in the modulation is necessary, as in the triangular frequency-modulation waveform shown in Fig. 18.3(b).
- The modulation need not necessarily be triangular; it can be sawtooth, sinusoidal, or some other shape. The resulting beat frequency as a function of time is shown in Fig. 18.3 (c) for triangular modulation.
- The beat note is of constant frequency except at the turn-around region. If the frequency is modulated at a rate f_m over a range f, the beat frequency is

$$f_r = 2 * 2 R f_m / c = 4 R f_m f / c$$

- Thus the measurement of the beat frequency determines the range R.

$$R = c f_r / 4 f_m \quad f$$

FMCW Application:-

1. Generally it is used only for single target.
2. It is used as an altimeter (it is not necessary to employ a linear modulation waveform) on board aircraft height above the ground.

FMCW Altimeter:

- The FM-CW radar principle is used in the aircraft radio altimeter to measure height above the surface of the earth.
- The large backscatter cross section and the relatively short ranges required of altimeters permit low transmitter power and low antenna gain.
- Since the relative motion between the aircraft and ground is small, the effect of the Doppler frequency shift may usually be neglected.
- The band from 4.2 to 4.4 G Hz is reserved for radio altimeters, although they have in the past operated at UHF.
- The transmitter power is relatively low and can be obtained from a CW magnetron, a backward-wave oscillator, or a reflex klystron, but these have been replaced by the solid state transmitter.
- The altimeter can employ a simple homodyne receiver, but for better sensitivity and stability the superheterodyne is to be preferred whenever its more complex construction can be tolerated.
- A block diagram of the FM-CW radar with a sideband superheterodyne receiver shown in Fig. A portion of the frequency-modulated transmitted signal is applied to a mixer along with the oscillator signal.

- The selection of the local-oscillator freq uency is a bit different from that in the usual superheterodyne receiver. The local-oscillator frequency f_{IF} should be the same as the intermediate frequency used in the receiver, whereas in the conventional superheterodyne the LO frequency is of the same order of magnitude as the RF signal.
- The output of the mixer consists of the varying transmitter frequency $f_o(t)$ plus two sideband frequencies, one on either side of $f_o(t)$ and separated from $f_o(t)$ by the local-oscillator frequency f_{IF}.
- The filter selects the lower sideband $f_o(t) - f_{IF}$ and rejects the carrier and the upper sideband.
- The sideband that is passed by the filter is modulated in the same fashion as the transmitted signal.

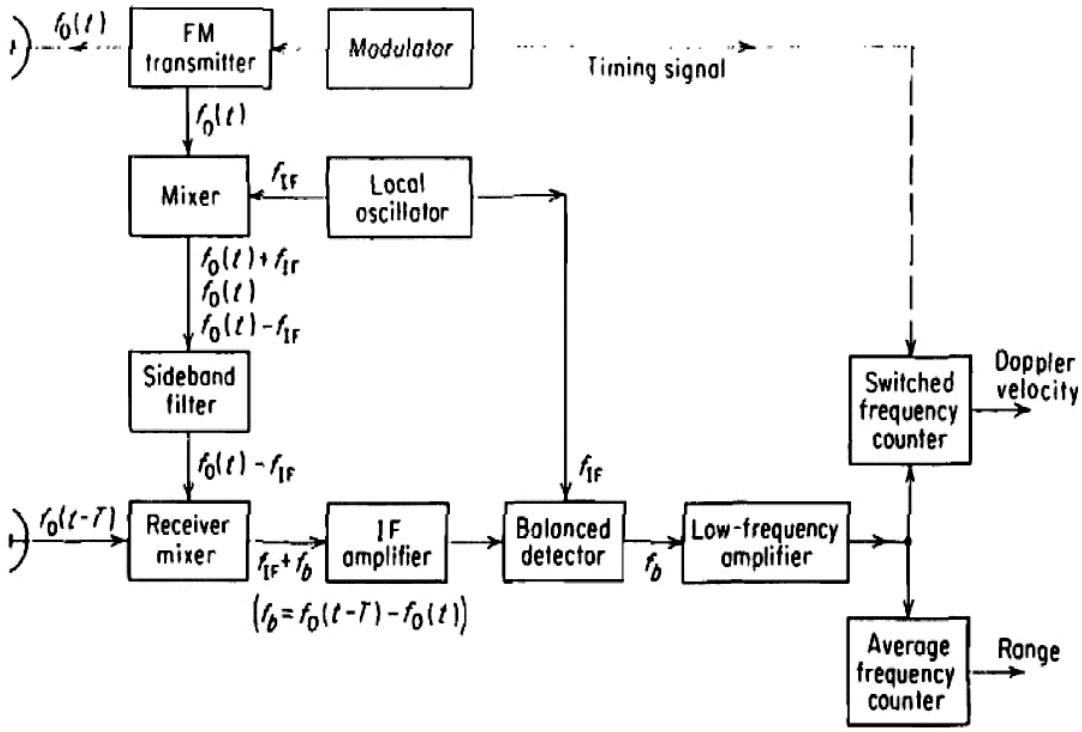

Fig: Block diagram of FM-CW radar using sideband superheterodyne receiver

- The sideband filter must have sufficient bandwidth to pass the modulation, but not the carrier or other sideband.
- The filtered sideband serves the function of the local oscillator. When an echo signal is present, the output of the receiver mixer is an IF signal of frequency $f_{IF} + f_b$ where f_b is composed of the range frequency fr and the doppler velocity frequency f_d.
- The IF signals is amplified and applied to the balanced detector along with the local oscillator signal f_{IF}.
- The output of the detector contains the beat frequency (range frequency and the Doppler velocity frequency), which is amplified to a level where it can actuate the frequency measuring circuits.
- In Fig. the output of the low-frequency amplifier is divided into two channels:

one feeds an average-frequency counter to determine range, the other feeds a switched frequency counter to determine the doppler velocity (assuming $f_r > f_d$) Only the averaging frequency counter need be used in an altimeter application, since the rate of change of altitude is usually small.

EFFECT OF NOISE SIGNALS ON FM ALTIMETER: The different noise signals occurring in a typical FM altimeter are:

- Due to the mismatch in impedance a part transmitted signal gets reflected from the space causing error in the altimeter.
- The mismatch between the sideband filter and receiving gives rise to standing wave pattern.
- The leakage signal due to the transmitting and receiving antennas reach the receiver and cause error.
- The double bounce signal.

Multiple Frequency CW Radar (MFCW)

- CW radar does not measure range, it is possible under some circumstances to do so by measuring the phase of the echo signal relative to the phase of the transmitted signal.
- The variation of phase with freq. is the fundamental basis of radar measurement of time delay or range measurement.

- It is easier to analysis the pulse radar and FMCW radar in term of time domain.
- The principal used in multiple freq. CW radar is the measurement of range by computing the phase difference.
- A measurement of range R of stationary target by employing continuous wave radar transmitting sine waves ($2\pi ft$).
- The time taken by the sine wave is $t=2R/c$
- The o/p given by the phase detector, which will compare the transmitted signal on the received signal is written as,

$$\Delta\varphi = 2\pi ft$$

$$\Delta\varphi = 2\pi f\,(2R/c)$$

$$= 4\pi fR/c$$

$$R = c\Delta\varphi / 4\pi f$$

$$R = \lambda\,\Delta\varphi / 4\pi$$

- The maximum error occurs in measure net of phase difference is 2π radians.
- If we put the value $\Delta\varphi = 2\pi$ the maximum ambiguity , in range is ,
- Block diagram of multiple freq. CW radar is almost as CW radar except it has got one more channel and measuring device.

- The better accuracy in range measurement may be provided by the large freq. diff. between the two transmitted signals.
- Transmitting three or four freq. instead of just two can make more accurate measurement.
- The transmitted waveform is assumed to consist of two continuous sine waves of frequency f1 and f2 separated by an amount Δf.
- The voltage waveforms of the two components of the transmitted signal v_{1r} and v_{2r}, may be written as

$$v_{1r} = \sin(2\pi f_1 t + \varphi_1)$$
$$v_{2r} = \sin(2\pi f_2 t + \varphi_2)$$

Where φ_1 and φ_2 are arbitrary (constant) phase angles.

- The echo signal is shifted in frequency by the doppler effect. The form of the Doppler shifted signals at each of the two frequencies *f1* and *f2* may be written as;

$$v_{1R} = \sin\left[2\pi(f_1 \pm f_{d1})t - \frac{4\pi f_1 R_0}{c} + \phi_1\right]$$
$$v_{2R} = \sin\left[2\pi(f_2 \pm f_{d2})t - \frac{4\pi f_2 R_0}{c} + \phi_2\right]$$

Where,

R_o = range to target at a particular time $t = t_0$ (range that would be measured if target were not moving)

f_{d1} = doppler frequency shift associated with frequency f_1

f_{d2} = doppler frequency shift associated with frequency f_2

- The receiver separates the two components of the echo signal, each received signal component with the corresponding transmitted waveform and extracts the two doppler-frequency components given below:

$$v_{1D} = \sin\left(\pm 2\pi f_d t - \frac{4\pi f_1 R_0}{c}\right)$$
$$v_{2D} = \sin\left(\pm 2\pi f_d t - \frac{4\pi f_2 R_0}{c}\right)$$

- The phase difference between these two components is;

$$\Delta\phi = \frac{4\pi(f_2 - f_1)R_0}{c} = \frac{4\pi\,\Delta f R_0}{c}$$

Hence;

$$R_0 = \frac{c\,\Delta\phi}{4\pi\,\Delta f}$$
$$R_{unamb} = \frac{c}{2\,\Delta f}$$

- A large difference in frequency between the two transmitted signals improves the accuracy.
- The two-frequency CW radar is essentially a single-target radar since only one phase difference can be measured at a time.

- If more than one target is present, the echo signal becomes complicated and the meaning of the phase measurement is doubtful.
- The theoretical rms range error is ,

$$\delta R = \frac{c}{4\pi \Delta f (2E/N_0)^{1/2}}$$

Where, E = energy contained in received signal

N_0 = noise power per Hz of bandwidth

Application of Multi Frequency CW Radar:-

1. Useful for satellite or space tracking.
2. It may be used for missile guidance and surveying.

Measurement Errors:

- The absolute accuracy of radar altimeters is usually of more importance at low altitudes than at high altitudes.
- Errors of a few meters might not be of significance when cruising at altitudes of 10km, but are important if the altimeter is part of a blind landing system.
- The theoretical accuracy with which distance can be measured depends upon the bandwidth of the transmitted signal and the ratio of signal energy to noise energy.
- In addition, measurement accuracy might be limited by such practical restrictions as the accuracy of the frequency-measuring device, the residual path-length error caused by the circuits and transmission lines, errors caused by multiple reflections and transmitter leakage, and the frequency error due to the turn-around of the frequency modulation.
- The discreteness of the frequency measurement gives rise to an error called the fixed error, or step error.
- It has also been called the quantization error, a more descriptive name.
- The average number of cycles N of the beat frequency f_b in one period of the modulation cycle f_m is f_b / f_m , where the bar over, denotes time average.

$$R = CN/4\Delta f$$

Where, R = range (altitude). m

c = velocity of propagation. m/s

Δf = frequency excursion. Hz

- Since the output of the frequency counter N is an integer, the range will be an integral multiple of $c/4\Delta f$ and will give rise to a quantization error equal to

$$\delta R = C/4\Delta f \quad \delta R \text{ (m)} = 75/\Delta f \text{ (MHz)}$$

- Since the fixed error is due to the discrete nature of the frequency counter, its effects can be reduced by wobbling the modulation frequency or the phase of the transmitter output.
- Wobbling the transmitter phase results in a wobbling of the phase of the beat signal so that an average reading of the cycle counter somewhere between N and N + 1 will be obtained on a normal meter movement.
- Normal fluctuations in aircraft altitude due to uneven terrain, waves on the water, or turbulent air can also average out the fixed error provided the time constant of the indicating device is large compared with the time between fluctuations.
- The residual path error is the error caused by delays in the circuitry and transmission lines. Multipath signals also produce error. Reflections from the landing gear can also cause errors.
- The fig. shows some of the unwanted signals that might occur in the FM altimeter. The wanted signals are shown by the solid line while unwanted signals are shown by the broken arrows.
- The unwanted signals include:
  1. The reflection of the transmitted signals at the antenna caused by impedance mismatch.
  2. The standing-wave pattern on the cable feeding the reference signal to the receiver, due to poor mixer match.
  3. The leakage signal entering the receiver via coupling between transmitter and receiver antennas. This can limit the ultimate receiver sensitivity, especially at high altitudes.
  4. The interference due to power being reflected back to the transmitter, causing a change in the impedance seen by the transmitter. The doublebounce signal.

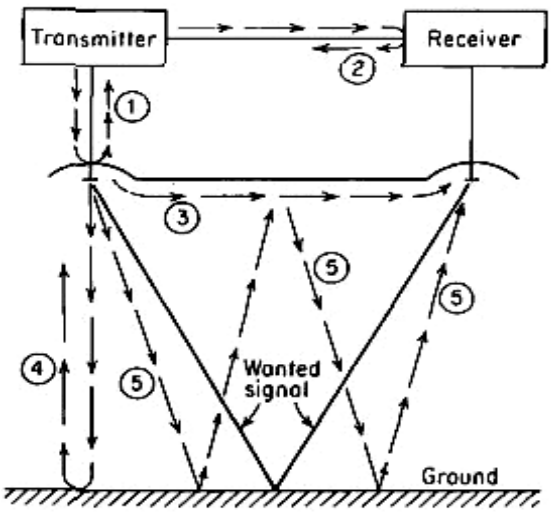

Fig: unwanted signals in FM altimeter

CHAPTER 3
MTI & PULSE DOPPLER RADAR

Introduction

- The radars discussed till now were required to detect target in the presence of noise. But in practical radar have to deal with more than receiver noise when detecting target while they can also receive echoes from the natural environment such as land, sea, weather etc.
- These echoes are called clutter, since they tend to clutter the radar display with unwanted information's.
- Clutter echoes signal has greater magnitude then echo signal receives from the aircraft.
- When an aircraft echo and a clutter echo appear in the same radar resolution cell, the aircraft might not be detected.
- But the Doppler effect permits the radar to distinguish moving target in the presence of fixed target even the echoes signal from fixed has comparatively than the moving target such as aircraft.

MTI Radar (Principle)

MTI radar with power amplifier transmitter

- The radar which uses the concept of Doppler frequency shift for distinguishing desired moving targets from stationary objects i.e., clutter is called as MTI radar (Moving Target Indicator).

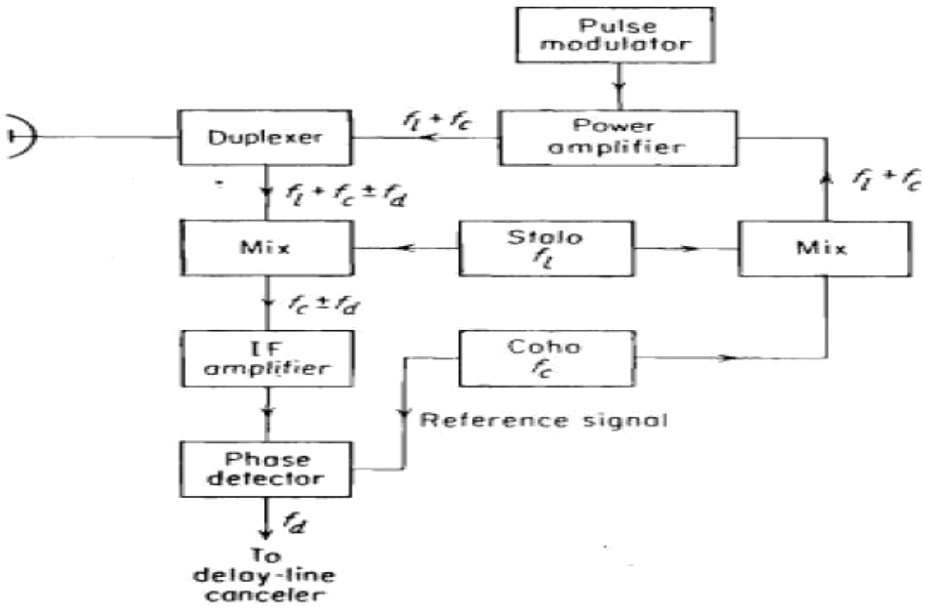

Figure: Block diagram of MTI radar with power amplifier transmitter

- The block diagram of MTI radar employing a power amplifier is shown in Fig. 21.1. The significant difference between this MTI configuration and that of Pulse Doppler radar is the manner in which the reference signal is generated. In Fig. 21.1, the coherent reference is supplied by an oscillator called the coho, which stands for coherent oscillator. The coho is a stable oscillator whose frequency is the same as the intermediate frequency used in the receiver.
- In addition to providing the reference signal, the output of the coho fc is also mixed with the local-oscillator frequency fl. The local oscillator must also be a stable oscillator and is called stalo, for stable local oscillator.
- The RF echo signal is heterodyned with the stalo signal to produce the IF signal, just as in the conventional super heterodyne receiver.
- The stalo, coho, and the mixer in which they are combined plus any low-level amplification are called the receiver exciter because of the dual role they serve in both the receiver and the transmitter.
- The characteristic feature of coherent MTI radar is that the transmitted signal must be coherent (in phase) with the reference signal in the receiver. The function of the stalo is to provide the necessary frequency translation from the IF to the transmitted (RF) frequency.
- Although the phase of the stalo influences the phase of the transmitted signal, any stalo phase shift is canceled on reception because the stalo that generates the transmitted signal also acts as the local oscillator in the receiver.

- The reference signal from the coho and the IF echo signal are both fed into a mixer called the pulse detector The phase detector differs from the normal amplitude detector since its output is proportional to the phase difference between the two input signals.
- Any one of a number of transmitting-tube types might be used as the power amplifier. These include the triode, tetrode, klystron, traveling-wave tube, and the crossed-field amplifier.

MTI radar with power oscillator transmitter

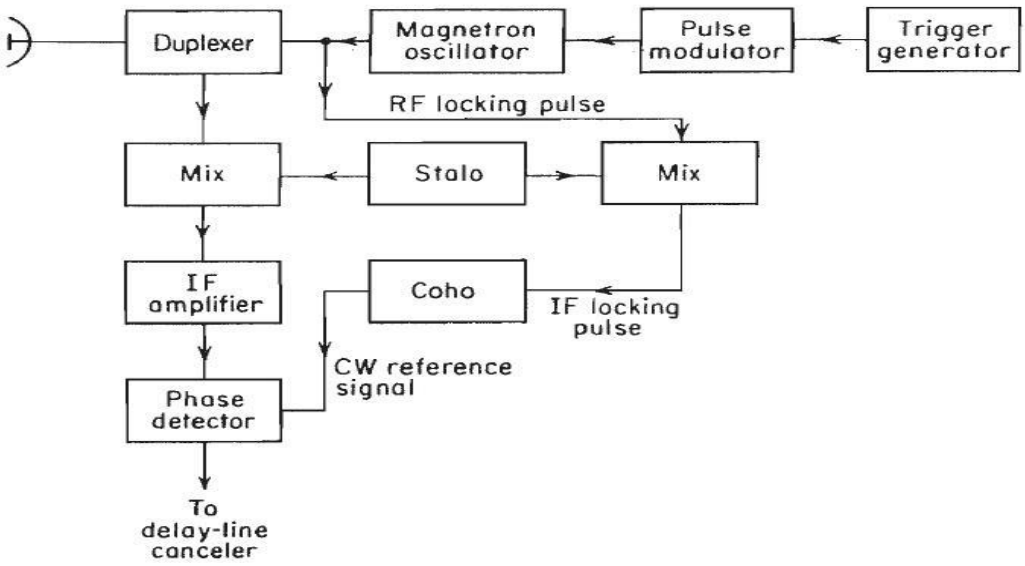

Figure 21.2. Block diagram of MTI radar with power oscillator transmitter

- A block diagram of MTI radar using a power oscillator is shown in Fig. 21.2. A portion of the transmitted signal mixed with the STALO output to produce an IF beat signal whose phase is directly related to the phase of the phase of the transmitter.
- This IF pulse is applied to the coherent (COHO) and cause the phase of the COHO CW oscillation to "lock" in step with the phase of the IF reference pulse.
- The phase of the COHO is then related to the phase of the transmitted pulse and may be used as the reference signal for echoes received from the particular transmitted pulse.
- Upon the next transmission another IF locking pulse is generated relocks the phase of CW COHO until the next locking pulse comes along.

➢ "BUTTERFLY" Effect in MTI Radar

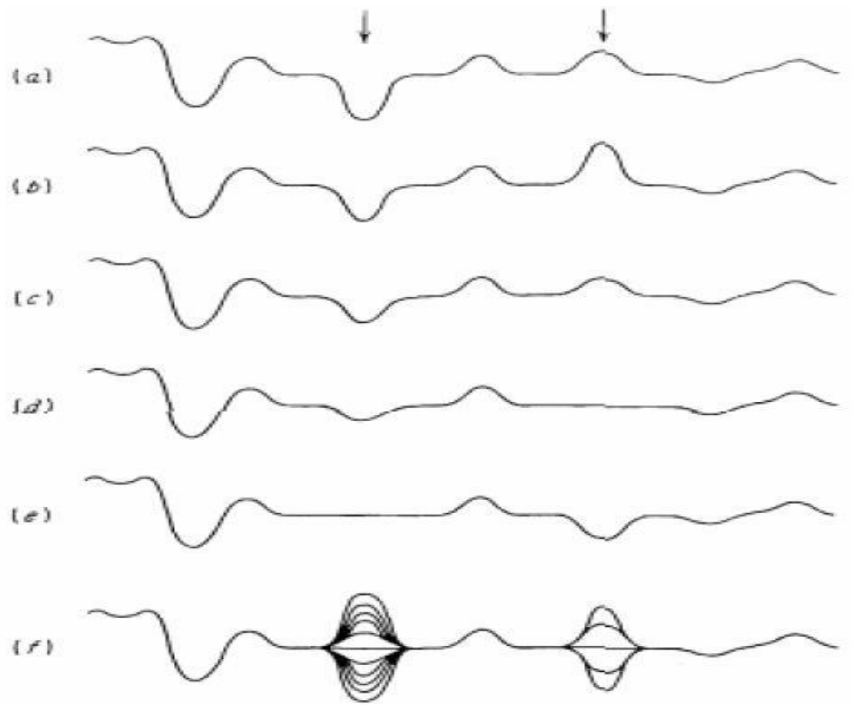

Figure 21.3. (a-e) Successive sweeps of an MTI radar A-scope display (echo amplitude as a function of time); (f) superposition of many sweeps; arrows indicate position of moving targets

- Moving targets may be distinguished from stationary targets by observing the video output on an A-scope (amplitude vs. range). A single sweep on an A-scope might appear as in Fig. 21.3 (a).
- This sweep shows several fixed targets and two moving targets indicated by the two arrows. On the basis of a single sweep, moving targets cannot be distinguished from fixed targets. (It may be possible to distinguish extended ground targets from point targets by the stretching of the echo pulse. However, this is not a reliable means of discriminating moving from fixed targets since some fixed targets can look like point targets, e.g., a water tower. Also, some moving targets such as aircraft flying in formation can look like extended targets.)
- Successive A scope sweeps (pulse-repetition intervals) are shown in Fig. 21.3 (b) to (e). Echoes from fixed targets remain constant throughout but echoes from moving targets vary in amplitude from sweep to sweep at a rate corresponding to the doppler frequency.
- The superposition of the successive A-scope sweeps is shown in Fig. 21.3(J). The moving targets produce, with time, a butterfly effect on the A-scope.

- **Delay Line Cancellers**

- It act as a filter to eliminate the DC component of fixed target and pass the ac components of moving target.
- Two types of delay line cancellers;
  1. Time domain filter / cancellers.
  2. Freq. domain filter / cancellers.

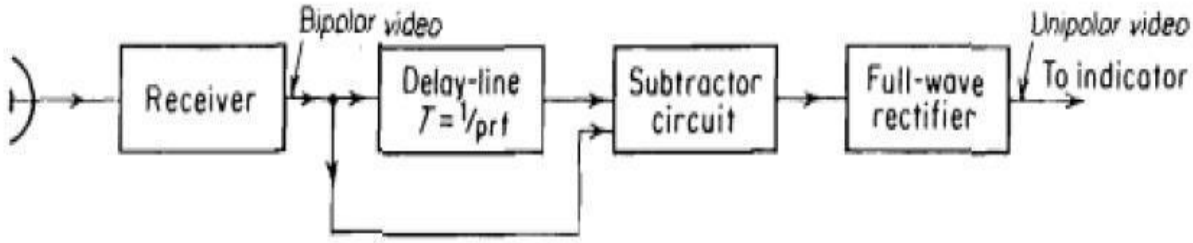

Figure 22.1. Block diagram of delay line cancellers

- The simple MTI delay-line canceller shown in Fig. 22.1 is an example of a time-domain filter. The capability of this device depends on the quality of the medium used is the delay line.
- The Pulse modulator delay line must introduce a time delay equal to the pulse repetition interval. For typical ground-based air-surveillance radars this might be several milliseconds.

- Delay times of this magnitude cannot be achieved with practical electromagnetic transmission lines. By converting the electromagnetic signal to an acoustic signal it is possible to utilize delay lines of a reasonable physical length since the velocity of propagation of acoustic waves is about 10^{-5} that of electromagnetic waves.
- After the necessary delay is introduced by the acoustic line, the signal is converted back to an electromagnetic signal for further processing.
- The use of digital delay lines requires that the output of the MTI receiver phase-detector be quantized into a sequence of digital words.
- The compactness and convenience of digital processing allows the implementation of more complex delay-line cancellers with filter characteristics not practical with analog methods.
- **One of the advantages of a time-domain delay-line canceller** as compared to the more conventional frequency-domain filter is that a single network operates at all ranges and does not require a separate filter for each range resolution cell.
- Frequency-domain doppler filter- banks are of interest in some forms of MTI and pulse-doppler radar.

Block Diagram of Delay Line Cancellers

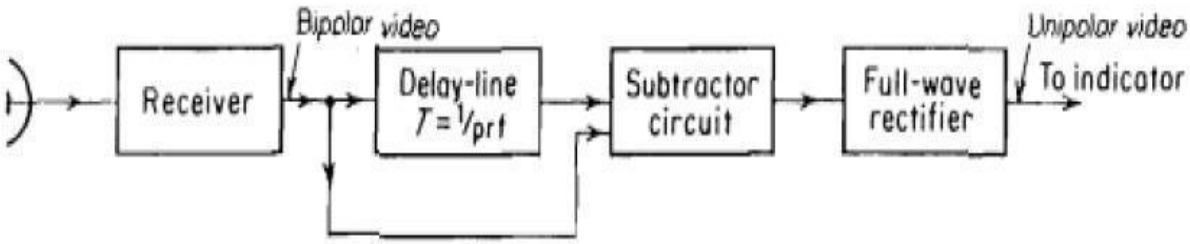

Figure 22.2. Block diagram of single delay line cancellers

- A block diagram of delay line canceller is shown as fig. 22.2. The bipolar video from the phase detector modulates a carrier before being applied to the delay lines.
- The radar output is not directly applied to the delay lines as a video since it would be differentiated by the crystal transducer that convert the EM energy into acoustic energy, and vice-versa.
- The modulated bipolar video is divided between two channels. In one channel the signal is delayed by a PRF, while in the other channel it reaches directly i.e. undelayed.
- There is considerable attenuation in the signal introduced by the delay line and must be amplified in order to bring it back to its original level.
- Since the introduction of an amplifier into the delay channel can alter the phase of the delayed waveforms and introduce a line delay, an amplifier with the same delay characteristics is also used in the direct channel.

- An attenuator might also be interested in the direct channel to make equalizing voltage residue of the order of 1% or 40db.
- The output from the delayed and undelayed channels are detected to remove the carrier and then subtracted. The uncancelled bipolar video from the sub tractor is rectified in a full wave rectifier to obtain unipolar video signal for displaying on the PPI.
- The purpose of automatic balancing to detect any amplitude timing differences and generate AGC error voltage to adjust the amplifier gain and timing control error voltage to adjust the repetition frequency of the trigger generator.

Types of Delay Line Cancellers

1. Acoustic Delay Line

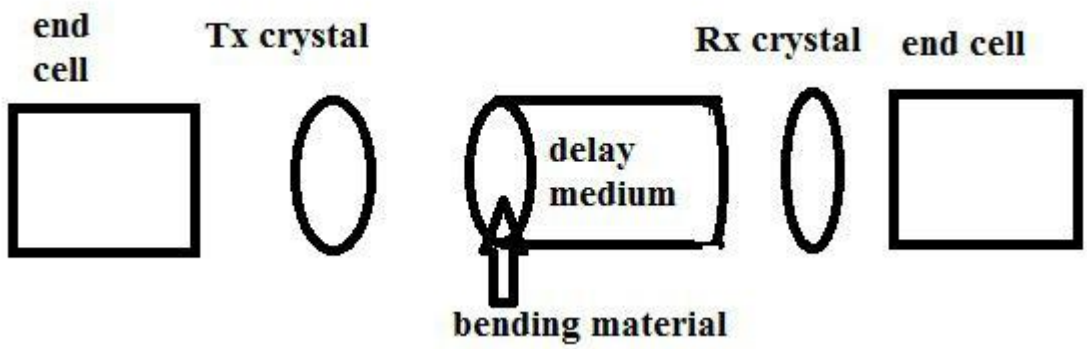

Figure 22.3. Elements of an acoustic delay line

- The basic elements of an acoustic delay line outlined in fig. 22.3. The EM energy is converted into acoustic energy by piezoelectric transmitting crystal.(like transducer) and at the o/p side acoustic energy converted back into EM energy.

2. Quartz Crystal

- It has a high Q device with an inherently small bandwidth. However, when transducer is coupled to a delay medium, the medium has a damping effect, which broadens the bandwidth. Consequently, acoustic delay lines are relatively broadband device.

3. Liquid Mercury

- One of simplest acoustic delay lines consist of a straight cylindrical tube filled with liquid mercury. The transit time of acoustic waves in mercury at room temperature is approximately 17.5 us./inch.
- To produce a delay of 1000 us the line must be 57 inch in length exclusively of end cells. This is manageable size in ground-based radar.
- A more compact configuration may be had by folding the line back itself one or more times. Another method of obtaining a more compact delay line is of make use of multiple reflection in a tank filled with liquid.
- The alignment of the reflecting surface is a problem, and it has been difficult to obtain a leak proof construction.
- One of the disadvantages of either solid or liquid delay is the large insertion loss.

Response of the Delay Line Canceller (Filter Characteristics)

- Filter characteristics of the delay-line canceller. The delay-line canceller acts as a filter which rejects the d-c component of clutter. Because of its periodic nature, the filter also rejects energy in the vicinity of the pulse repetition frequency and its harmonics.
- The video signal received from a particular target at a range R0 is

$$V_1 = k \sin (2\pi fdt - \varphi_0)$$

  Where, φ0 = phase shift

  k = amplitude of video signal.
- The signal from the previous transmission, which is delayed by a time T = pulse repetition interval, is

$$V_2 = k \sin (2\pi fd(t - T) - \varphi_0)$$

- Everything else is assumed to remain essentially constant over the interval T so that k is the same for both pulses. The output from the sub tractor is

$$V = V_1 - V_2 = 2*k \sin \pi fdT \cos [2\pi fd(t - T / 2) - \varphi_0]$$

- It is assumed that the gain through the delay-line canceller is unity. The output from the canceller V consists of a cosine wave at the doppler frequency *fd* with an amplitude2*k sin πfdT .

- Thus the amplitude of the canceled video output is a function of the Doppler frequency shift and the pulse-repetition interval, or PRF.
- The magnitude of the relative frequency-response of the delay-line canceller [ratio of the amplitude of the output from the delay-line canceller, 2*k sin πfdT, to the amplitude of the normal radar video k_j is shown in Fig. 23.1.

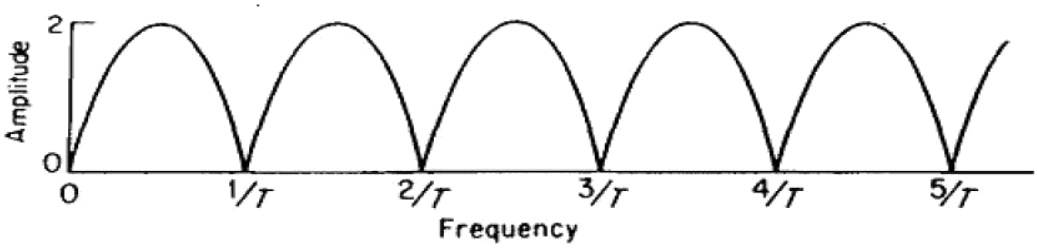

Figure 23.1. Frequency response of single delay line cancellers

Double Delay Line Canceller

- The frequency response of a single-delay-line canceller does not always have as broad clutter-rejection null as might be desired in the vicinity of d-c. The clutter-rejection notches may be widened by passing the output of the delay-line canceller through a second delay-line canceller as shown in Fig. 23.2. The output of the two single-delay-line cancellers in cascade is the square of that from a single canceller.
- Thus the frequency response is4 sin2 πfdT. The configuration of Fig. 23.2 is called a double-delay-line canceller, or simply a double canceller. The relative response of the double canceller compared with that of a single delay line canceller is shown in Fig. 23.3.
- The finite width of the clutter spectrum is also shown in this figure so as to illustrate the additional cancellation of clutter offered by the double canceller.
- The two-delay-line configuration of Fig. 23.2 has the same frequency-response characteristic as the double-delay-line canceller. The operation of the device is as follows. Signal f (t) is inserted into the adder along with the signal from the preceding pulse period, with its amplitude weighted by the factor - 2, plus the signal from two pulse periods previous. The output of the adder is therefore

$$f(t) - 2f(t + T) + f(t + 2T)$$

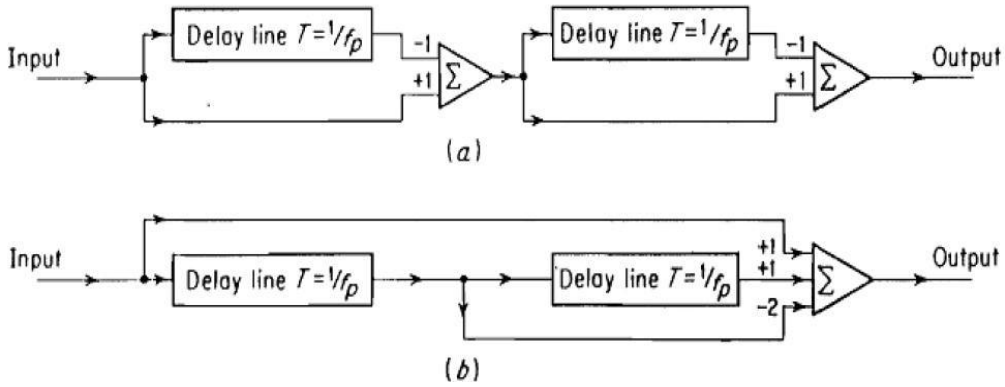

Figure 23.2. (a) Double delay line canceller (b) Three pulse canceller

- Which is the same as the output from the double-delay-line canceller

$$f(t) - f(t + T) - f(t + T) + f(t + 2T)$$

- This configuration is commonly called the three-pulse canceller.

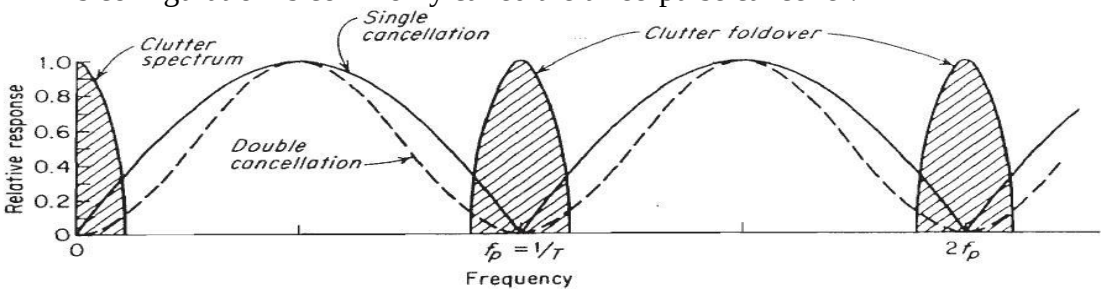

Figure 23.3. Frequency response of single & double delay line canceller

➢ Blind Speed

- The response of the single-delay-line canceller will be zero whenever the argument $\pi f_d T$ in the amplitude factor of $V = V_1 – V_2 = 2*k \sin \pi f_d T \cos [2\pi f_d(t – T / 2) - \varphi_0]$ is 0, π, 2π,..., etc., or when $fd = n / T = n f_p$

  Where,

  $n = 0, 1, 2, \ldots$

  fp = pulse repetition frequency.

- The delay-line canceller not only eliminates the d-c component caused by clutter (n = 0), but unfortunately it also rejects any moving target whose doppler frequency happens to be the same as the PRF or a multiple thereof. Those relative target velocities which result in zero MTI response are called blind speeds and are given by;

$$\boldsymbol{V_n = n\lambda / 2T = n\lambda f_p / 2}$$

  Where,

  v_n is the nth blind speed.

- If λ is measured in meters, fp in Hz, and the relative velocity in knots, the blind speeds are;

$$\boldsymbol{V_n = n\lambda f_p / 1.02}$$

- The blind speeds are one of the limitations of pulse MTI radar which do not occur with CW radar. They are present in pulse radar because doppler is measured by discrete samples (pulses) at the PRF rather than continuously. If the first blind speed is to be greater than the maximum radial velocity expected from the target, the product λf_p must be large.

Multiple or Staggered Pulse Repetition Frequencies

- If radar is operating at multiples PRFs or its PRF is changed either pulse to pulse or scan to scan, than the effect of blind speed can be eliminated from the radar. If two radar operating at same frequencies but having its different PRF then if one radar is blind to moving target.
- So, if we use single radar but having different PRF than the same affect can be achieved. When the PRF is changing pulse to pulse than it may be called as staggered PRF. Staggering of PRF is generally employed in Air Traffic Control Radar such as Surveillance Radar Element (SRE).

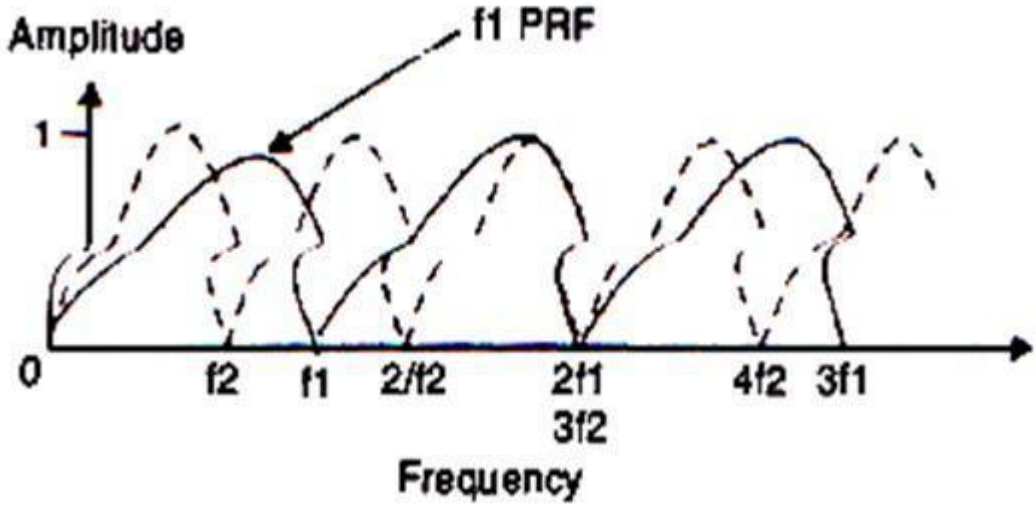

Figure 24.1. Frequency response of two PRF

- In the Fig. 24.1 above the frequency response of two PRF is shown. Suppose the first PRF is F_1 shown in bold line and the speed of second PRF is F_2 shown in dotted lines. If we observed the figure, it is clear that at particular position when $2f_1=3f_2$, both the PRFs have the same blind speed.
- The multiples PRFs can be obtained by using several methods. Using the following techniques may vary the PRFs:
  1. Pulse to pulse (known as staggered PRF)
  2. Scan to scan
  3. Dwell to dwell.
- The problems occur in using staggered PRF is that residual of unconcealed echoes of clutters, which are due to second time around echoes. So to minimize the second time around echoes affect, if we use unstaggered PRF in the sector where second time around are expected more and rest of the sector used staggered PRFs.

Range gated Doppler Filters

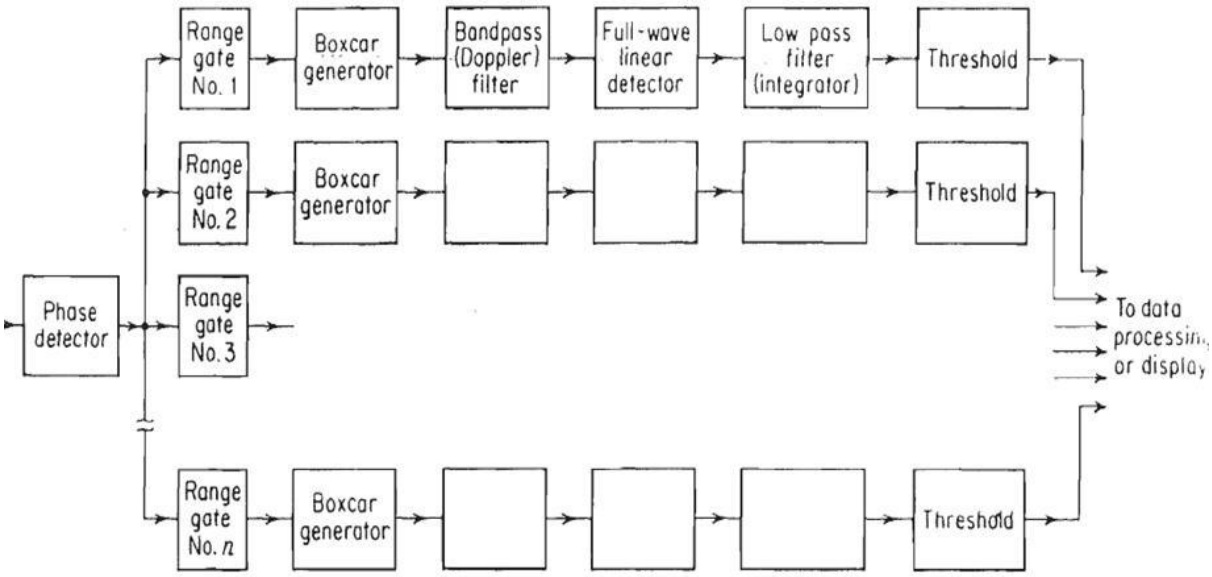

Figure 24.2. Block diagram of MTI radar using range gated filter

- In order to separate moving targets from stationary clutter, the delay line canceller has been widely used in MTI radar. Quantizing the time in to small interval can eliminate the loss of range information and collapsing loss. This process is known as the range gating where width depends on range accuracy desired. After quantizing the radar return interval, the output from each gate is applied to narrow band filter.

- A block diagram of the video of an MTI radar using multiple range gates followed by clutter rejection filter is shown in Fig. Here the range gates sample the output of the phase detector sequentially range interval.
- Each range open in sequence just long enough to sample the voltage of the video waveform corresponding to a different range interval in space or it acts as a switch/gate which open and close at a proper time.
- The output of the range gate is given to a circuit known as box car generator. Its function is to aid in the filtering and detection process enhancing the fundamental of the modulation frequency and eliminating harmonics of the PRF.
- The clutter rejection filter is nothing but a band pass filter whose bandwidth depends on the extent of the excepted clutter spectrum. The filtered output from the Doppler filter is further fed to a full wave linear detector which convert the bipolar video.
- A low pass filter or integrator passes these unipolar video to the threshold detection circuit. Any signal crosses the threshold level is treated as a target. The outputs from each range channels are combined for display on the PPI or any other display unit.

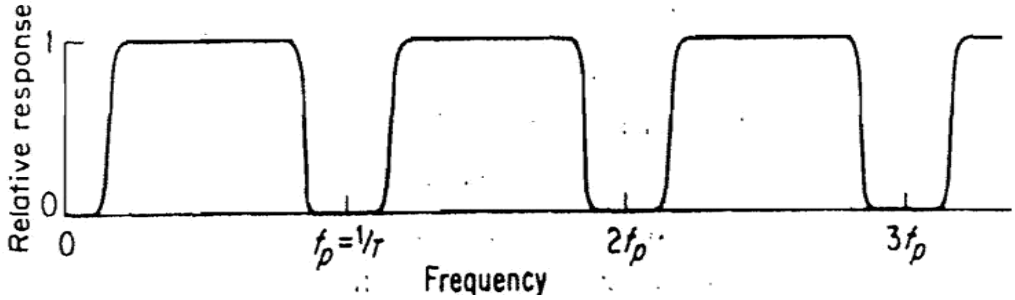

Figure 24.3.Frequencu response characteristics of range gated filter

- The presentation of this type of MTI radar is far better than the display from normal MTI radar.
- The frequency response characteristics of an MTI radar using range gates and filter is shown in fig. the shape of the rejection band is mainly determined by the shape of the band pass filter.
- It must be pointed out that the MTI radar using range gates and filters is more complex than an MTI with single delay line canceller a better MTI performance is achieved from a better match between clutter filter characteristics and clutter spectrum.

➢ Non coherent MTI (EXTERNALLY COHERENT)

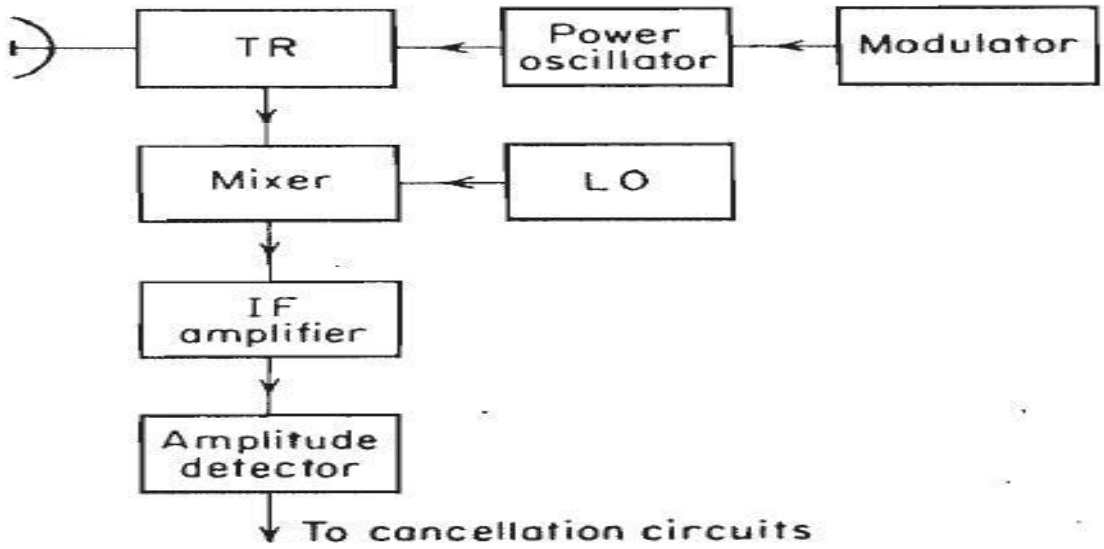

Figure 25.2. Block diagram of Non coherent MTI

- The echo signal received from a moving target or from clutter fluctuates both in amplitude and phase. Where the MTI makes the use of phase fluctuation than it is called coherent MTI and where the amplitude fluctuation is being than it is called as non-coherent MTI. In non-coherent MTI, the amplitude fluctuation is used to recognize the Doppler components produced by a moving target. It is also called externally coherent.

- The block diagram of non-coherent MTI is shown in fig. 25.2. In non-coherent MTI amplitude limiter cannot be used otherwise desired amplitude fluctuation would be lost. Instead of using phase detector we are using amplitude detector. Therefore, IF amplifier should be linear and should have large dynamic range.
- A logarithm amplifier may be used as IF amplifier to have logarithm gain characteristics, such as protection from saturation and have uniform output with variations in the clutter input amplitude. The output of IF amplifier to be detected over the A- scope.
- A butterfly effect can be observed on the A-scope due to the Doppler in amplitude fluctuation. The transmitter should be stable over the pulse duration to prevent beat from the overlapping ground clutter.

- **Advantages:**
  1. It is very simple and may be used where space and weight are limited.
- **Limitation:**
  1. The target must be in the presence of relatively large clutter signals if moving-target detection is to take place.
  2. Clutter echoes may not always be present over the range at which detection is desired.
  3. The clutter serves the same function as does the reference signal in the coherent MTI. If clutter were not present, the desired targets would not be detected.
  4. It is possible, however, to provide a switch to disconnect the non-coherent MTI operation and revert to normal radar.

➢ Pulse Doppler Radar

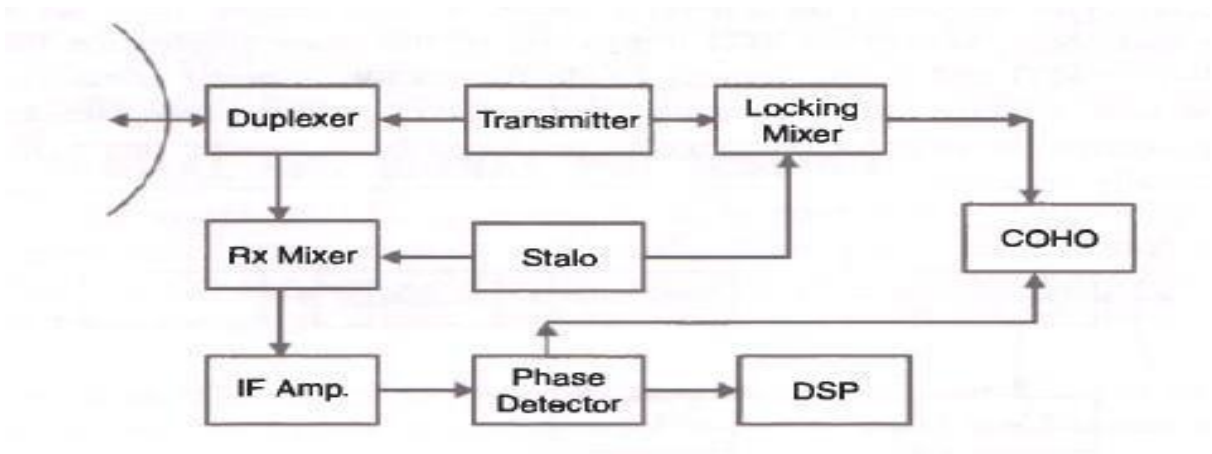

Figure 25.3. Block diagram of pulse Doppler radar

- Pulse radar is a combination of pulse radar and CW radar. It works on the principal of Doppler shift as MTI radar follows. As per the Nyquist Criterion the sampling rate (i.e. PRF) should be greater and equal to the twice of the Doppler shift frequency but in MTI due to use of low frequency it's became under sampled.
- It will leads to ambiguous estimation of target speed and occurrence of blind speed, where target appears stationary and unresolvable against the back ground clutter. Pulse Doppler radar being high PRF radar, it can remove the Doppler ambiguities.
- To extract the Doppler shift information of the carrier the pulse radar should be modified by introducing a coherent oscillator (COHO) for frequency stability in the transmitter and receiver chain. It employs the coherent radar system.
- Pulse Doppler radar is classified as high PRF and as medium PRF. In high PRF pulse radar there is ambiguity in the range but unambiguity in the velocity. In the medium PRF pulse radar there is ambiguities in range and velocity both.
- A STALO (stable local oscillator) is used to allow the phase of transmitter signal to be maintained by a locking mixer. The output of locking mixer given to lock the COHO phase and in turn it serves as reference phase for the detector at intermediate frequency.
- Now, the phase detector measures the difference in phase between two RF signal. Due to the target motion the phase path of the echo changes pulse path of the echo changes pulse to pulse and by the same amount phase difference will vary.

- **Applications:**
  1. It is being used as weather warning radar at the airbases to detect and measure thunderstorm, turbulence in the air.
  2. It is very useful in detecting and estimating the target motion, locking of particular target out of the group.
  3. To observe thunderstorm, rain and hail, a double polarization Doppler radar is being used.
- **Advantages:**
  1. A pulse Doppler radar has got the ability to reject the unwanted echoes by using Doppler filters or by a range gating.
  2. It can measure the range and velocity over predetermined limits, even in presence of multiples target.
  3. Signal to noise ratio can be increased by using coherent integration.

➢ MTI from moving platform

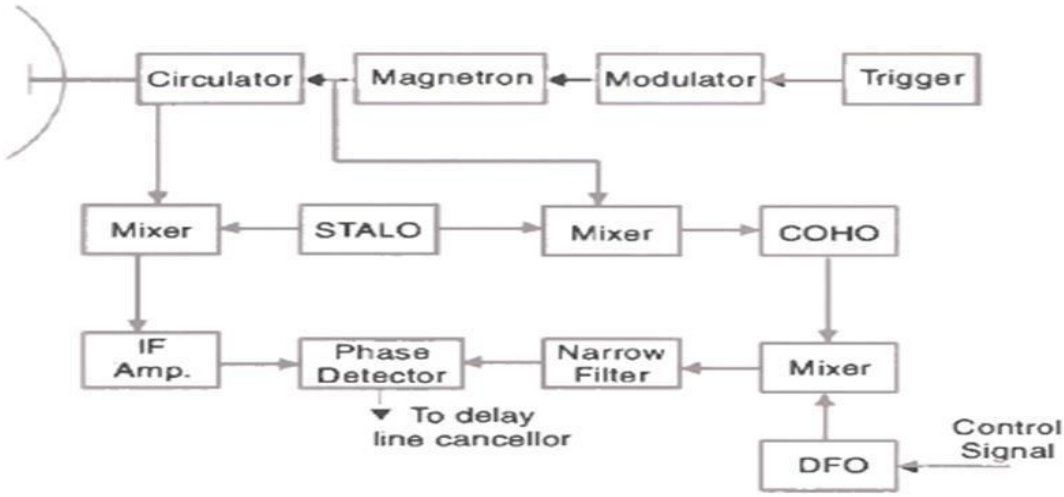

Figure 26.1. Block diagram of MTI from moving platform

- When radar is mounted on ship or on aircraft and it is in motion the detection of moving target in presence of clutter becomes more difficult than when it is stationary.
- In AMTI doppler shift of the clutter varies with the direction of antenna in azimuth and elevation angle to the clutter.
- Clutter velocity depends on aircraft velocity and the direction of the clutter relative to the aircraft velocity vector.

- Doppler frequency is given by,

$$f_d = 2\,(v/\lambda)\cos\Theta$$

$$f_d = 2\,(v/\lambda)\sin\Theta\,\Delta\Theta$$

Where; v = Platform speed

Θ = Azimuth angle

- If the beam width is taken as $\Delta\Theta$ then f_d represents the measure of the width of doppler freq. spectrum.
- Effect of AMTI considered as having two component:
- 1) Direction of antenna pointing
- 2) Normal to the direction of antenna.
- The frequency of COHO is shifted to compensate for the relative velocity of the radar platform with respect to the clutter.
- DFO (Doppler freq. oscillator) is being used which is a tuned oscillator.
- The o/p of this oscillator is made to be proportional to the relative velocity b/w radar and clutter and may be controlled according to the position of the antenna with respect to clutter.

- **Pulse Doppler MTI:-**

- A pulse Doppler MTI radar can be a better from of AMTI radar. In this using a rejecter filter can eliminate the ground clutter signal, which are being shifted in frequency by the Doppler Effect.
- If the rejection cannot continuously track the changing doppler frequency caused by a relative velocity, a narrow pencil beam may be used in which change in doppler occur as antenna is scanned in angle.

- **Non-coherent MTI radar:-**

- Due to less weight and space occupied by a non-coherent MTI, it is being preferred in aircraft, the non-coherent AMTI is limited, as its ground based counterpart, by the need for sufficient clutter signal to provide the reference upon which the Doppler fluctuation may be detected.

- **Fluctuation caused by platform motion:-**
- The clutter that the radar illuminates consists of number of independent scatters randomly.
- The each echo signals add vectorically at the receiving antenna.
- A change in distance so change in phase and vector addition of the all the echo signals may not be same pulse to pulse.

Tracking with Radar

- A tracking-radar system
  1. Measures the coordinates of a target and
  2. Provides data which may be used to determine the target path and to predict its future position.
- All or only part of the available radar data-range, elevation angle, azimuth angle, and Doppler frequency shift may be used in predicting future position; that is, a radar might track in range, in angle, in Doppler, or with any combination.
- Almost any radar can be considered a tracking radar provided its output information is processed properly. But, in general, it is the method by which angle tracking is accomplished that distinguishes what is normal normally considered a tracking radar from any other radar.
- It is also necessary to distinguish between a continuous tracking radar and a track-while-scan (TWS) radar.

- The continuous tracking radar supplies continuous tracking data on a particular target, while the track-while-scan supplies sampled data on one or more targets. In general, the continuous tracking radar and the TWS radar employ different types of equipment.
- The antenna beam in the continuous tracking radar is positioned in angle by a servomechanism actuated by an error signal.
- The various methods for generating the error signal may be classified as sequential lobbing, conical scan, and simultaneous lobbing or monopulse.
- The range and Doppler frequency shift can also be continuously tracked, if desired, by a servo control loop actuated by an error signal generated in the radar receiver.

Conical scan

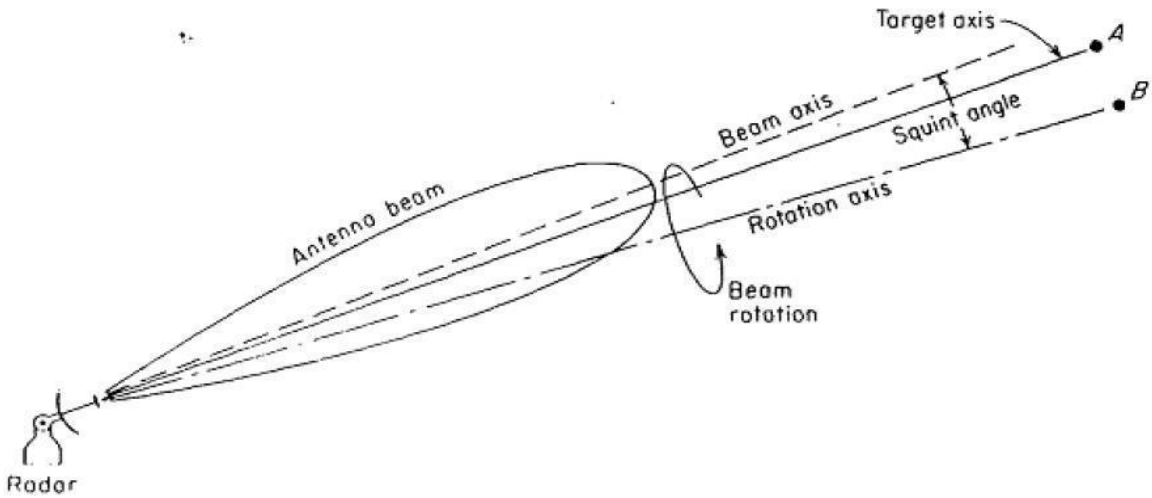

Figure 27.1. Conical scan track

- The logical extension of the sequential lobbing technique is to rotate continuously an offset antenna beam rather than discontinuously step the beam between four discrete positions. This is known as conical scanning (Fig. 27.1). The angle between the axis of rotation (which is usually, but not always, the axis of the antenna reflector) and the axis of the antenna beam is **called the squint angle.**
- Consider a target at position A. The echo signal will be modulated at a frequency equal to the rotation frequency of the beam. The amplitude of the echo-signal modulation will depend upon the shape of the antenna pattern, the squint angle and the angle between the target line of sight and the rotation axis.
- The phase of the modulation depends on the angle between the target and the rotation axis. The conical scan modulation is extracted from the echo signal and applied to a servo-control system which continually positions the antenna on the target. When the antenna is on target, as in B of Fig. 27.1, the line of sight to the target and the rotation axis coincide, and the conical-scan modulation is zero.

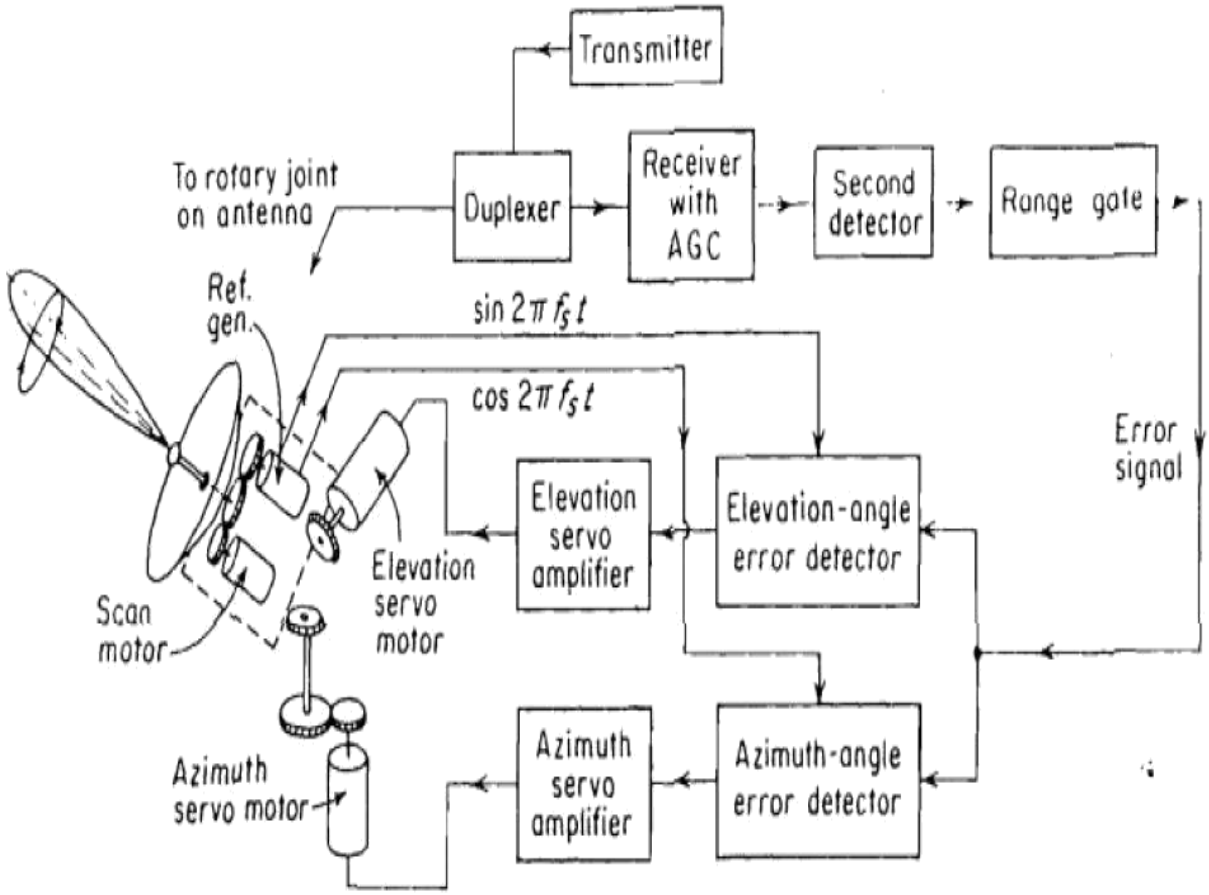

Figure 27.2. Block diagram of conical scan

- A block diagram of the angle-tracking portion of a typical conical-scan tracking radar is shown in Fig. 27.2. The antenna is mounted so that it can be positioned in both azimuth and elevation by separate motors, which might be either electric- or hydraulic-driven. The antenna beam is offset by tilting either the feed or the reflector with respect to one another.
- One of the simplest conical-scan antennas is a parabola with an offset rear feed rotated about the axis of the reflector. If the feed maintains the plane of polarization fixed as it rotates, it is called a nutating feed.
- A rotating feed causes the polarization to rotate. The latter type of feed requires a rotary joint. The nutating feed requires a flexible joint. If the antenna is small, it may be easier to rotate the dish, which is offset, rather than the feed, thus avoiding the problem of a rotary or flexible RF joint in the feed.
- A typical conical-scan rotation speed might be 30 r/s. The same motor that provides the conical-scan rotation of the antenna beam also drives a two phase reference generator with two outputs 90° apart in phase. These two outputs serve as a reference to extract the elevation and azimuth errors.
- The received echo signal is fed to the receiver from the antenna via two rotary joints (not shown in the block diagram). One rotary joint permits motion in azimuth, the other, in elevation.

- The receiver is a conventional super heterodyne except for features peculiar to the conical scan tracking radar. One feature not found in other radar receivers is a means of extracting the conical-scan modulation, or error signal. This is accomplished after the second detector in the video portion of the receiver.
- The error signal is compared with the elevation and azimuth reference signals in the angle-error detectors, which are phase-sensitive detectors. A phase sensitive detector is a nonlinear device in which the input signal (in this case the angle-error signal) is mixed with the reference signal.
- The input and reference signals are of the same frequency. The output d-c voltage reverses polarity as the phase of the input signal changes through 180°. The magnitude of the d-c output from the angle-error detector is proportional to the error, and the sign (polarity) is an indication of the direction of the error. The angle-error detector outputs are amplified and drive the antenna elevation and azimuth servo motors.
- The angular position of the target may be determined from the elevation and azimuth o the antenna axis. The position can be read out by means of standard angle transducers such as synchronous, potentiometers, or analog-to-digital-data converters.
- **Advantages:-**
  1. It require a minimum no. of hardware so inexpensive.
  2. It is used in mobile system AAA or a mobile SAM sites.

- **Disadvantages:-**
  1. It is not able to see target outside their narrow scan patterns.

Sequential Lobbing

- A simple pencil-beam antenna is not suitable for tracking radars unless means are provided for determining the magnitude and direction of the target's angular position with respect to some reference direction, usually the axis of the antenna.
- The difference between the target position and the reference direction is the **angular error.**
- When the angular error is zero, the target is located along the reference direction.
- One method of obtaining the direction and the magnitude of the angular error in one coordinate is by alternately switching the antenna beam between two positions is called **lobe switching, sequential switching, or sequential lobbing.**

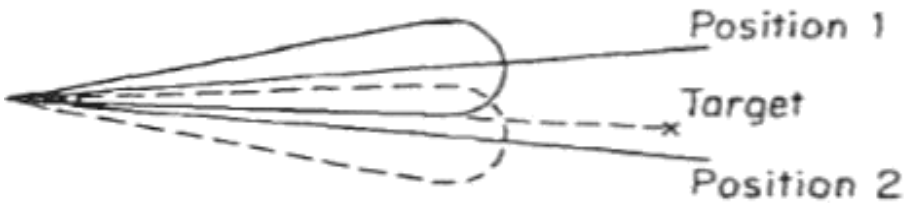

Figure 27.3. Dual beam polar pattern in sequential lobbing

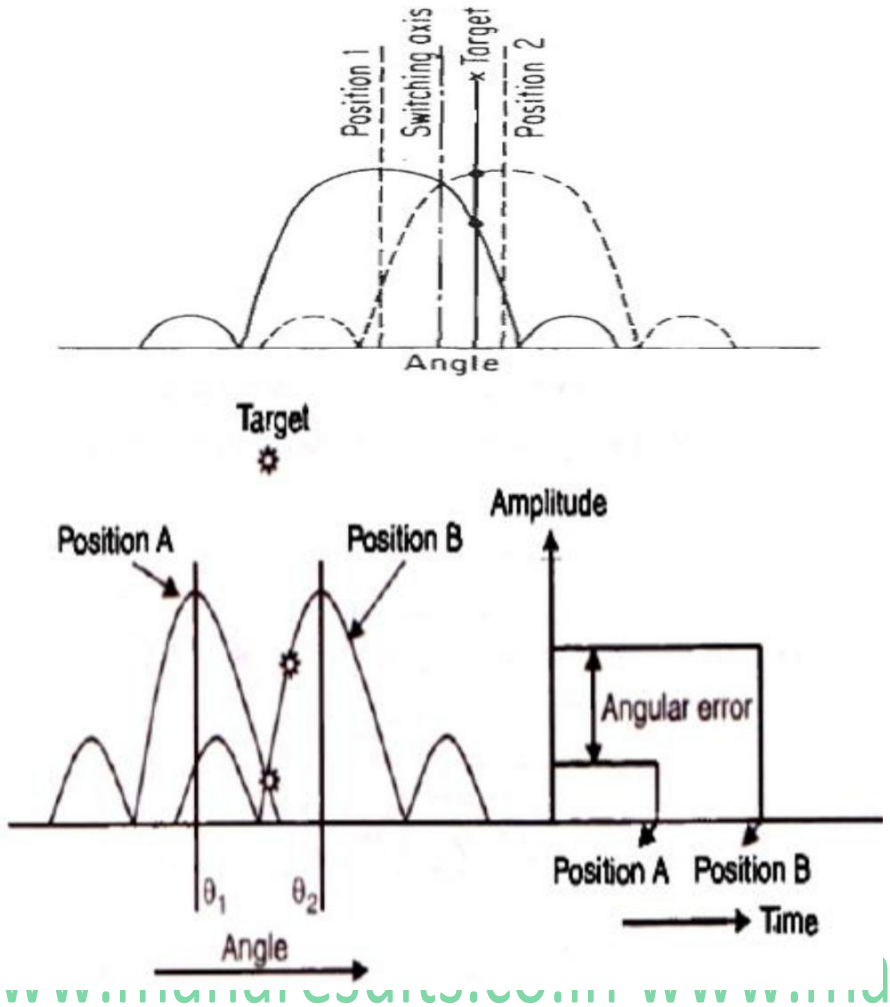

Figure 27.4. Rectangular representation and error signal

- There are total four switching position (up-down, right-left) are needed (two additional) to obtain angular error in orthogonal coordinate.

- The difference in amplitude between the voltages obtained in the two switched positions is a measure of the angular displacement of the target from the switching axis.
- The sign of the difference determines the direction the antenna must be moved in order to align the switching axis with the direction of the target
- When the voltages in the two switched positions are equal, the target is on axis and, its position may be determined from the axis direction.
- **Advantage:-**

  1. Target position accuracy can be better than the size of antenna beam width.

- **Applications:**

  1. They were used in airborne-interception radar.
  2. They were used in ground-based antiaircraft fire-control radars.

➢ Mono-pulse Tracking

- There are two disadvantages in conical scanning and sequential lobbing.
  1. The motion of the antenna is more complex in both.
  2. In conical scan a min. of four pulse is required. Due to the effect of target cross section and the effect of fluctuating echo sometimes need of no. of pulses to extracting error.
- This problem Can be overcome by using only one pulse.
- The tracking technique which derives angle error information on the basis of single pulse is known as a mono pulse tracking or simultaneous lobbing more than one antenna beam is used simultaneously where as in conical scanning and sequential lobbing one antenna beam is used on the time shared base.

➢ Difference between MTI Radar and CW Radar:

CW Radar	MTI Radar
1. Using this radar, we can not measure range	1. Using this radar, we can measure range of a
2. This radar can not have blind speeds and	2. This radar has blind speeds and phases.
3. It is difficult to avoid transmitter to receiver	3. It is easy to avoid transmitter to receiver
4. This radar has little inability to distinguish between approaching and receiding target.	4. This radar not only distinguishes the approaching and receiding target but also

Differences between blind speeds and blind phases:

Blind speeds	Blind phases
1.The relative velocities of the target at which MTI response is zero are called as blind speeds and are given by $v_n = \frac{n\lambda}{2T}$; n=0,1,2 or $v_n = \frac{n\lambda f_p}{2}$	1. The blind phases are due to the presence of sampling pulses at the same point in the Doppler cycle at each sampling instant.
2. Due to the presence of blind speeds within a Doppler frequency band, the capability of	2. When the Doppler frequency is half of the PRF, blind phases with single has serious
3. By operating with more than one PRF or operating at more than one RF frequency	3. By using quadrature, we can eliminate the blind phases.
4. Effect is more in MTI Radars.	4. Effect is more in MTI Radars.

➢ Limitations of MTI Performance:

Improvement in signal to clutter is affected by factors other than the Doppler spectrum. Instabilities in the transmitter and receiver, physical motion of the clutter, finite time on target and receiver limiting all affect I_c.

1. ***MTI Improvement Factor I:*** The signal to clutter ratio at the output of the MTI system divided by the signal to clutter ratio at the input, averaged over all of the target radial velocities of interest.
2. ***Subclutter Visibility (SCV):*** The ratio by which the target echo may be weaker than the coincident clutter echo power and still be detected with specified P_d and P_{fa}. All target radial velocities are assumed equally likely.

   Note: A typical value is 30 dB

   Note: Two radars with the same subclutter visibility might not have the same ability to detect targets in clutter if the resolution cell of one is greater and accepts more clutter echo power.
3. ***Clutter Visibility Factor Voc:*** The signal to clutter ratio after cancellation (or Doppler processing) that provides the stated Pd and Pfa.
4. ***Clutter Attenuation CA:*** the ratio of the clutter power at the canceller input to the clutter residue at the output, normalized (divided by) to the attenuation of a single pulse passing through the unprocessed channel of the canceller
5. ***Cancellation Ratio:*** The ratio of canceller voltage amplification for fixed target echoes received with a fixed antenna, to the gain for a single pulse passing through the unprocessed channel of the canceller.

   Note: $I_c = (SCV)(V_{oc})$

Note: When the MTI is limited by noise like system instabilities, Voc should be chosen as the SNR for range equation calculations.

Note: when the MTI is limited by antenna scanning fluctuations, let Voc = 6dB for a single pulse.

Note: Once again, I is the preferred measure of MTI performance but does not account for possible poor performance at certain velocities

6. ***Interclutter Visibility:*** The ability of the MTI to detect moving targets in clear resolution cells between patches of strong clutter. Resolution cells can be range, azimuth or Doppler.

   Note: the higher the radar resolution, the better the interclutter visibility. A medium resolution radar with 2μs pulse width and 1.5 ° beamwidth has sufficient resolution to achieve a 20 dB advantage over low resolution radars

7. ***Equipment Instabilities:*** The apparent frequency spectrum from perfectly stationary clutter can be broadened (and hence will degrade the MTI improvement factor) due to the following:

   - Pulse to pulse changes in amplitude
   - Pulse to pulse changes in frequency
   - Pulse to pulse changes in phase
   - Timing jitter on transient pulse
   - Variations in time delay through the delay lines
   - Changes in pulse width
   - Changes in coho or stalo between time of transmit and time of receive

8. ***Internal Fluctuation of Clutter:*** Absolutely stationary clutter - buildings, water towers, mountains, bare hills Dynamic clutter - trees, vegetation, sea, rain, chaff Can limit the performance of MTI

9. **Antenna Scanning Modulation:**

   A scanning antenna observes a target for time t_0 where n_B is the number of hits received

$$t_0 = \frac{n_B}{f_p} = \frac{\theta_B}{\dot{\theta}_S}$$

Where n_B is the number of hits received

The received pulse train of finite duration t_0 has a frequency spectrum which is proportional t_o. Hence even if the clutter were perfectly stationary, the clutter spectrum would have a finite width due to the finite time on target.

If the clutter spectrum is too wide due to too short an observation interval, the improvement factor will be affected. This limitation is called scanning fluctuation or scanning modulation. To find the limitation on I_c we first find the clutter attenuation CA

- **DIFFERENCE BETWEEN PULSE DOPLER RADAR AND MTI RADAR:**

1. Pulse Doppler radar, in this the radar send the pulse train to detect the position of target and MTI (moving target indicator) in which it detect the target which is moving.
2. In pulse radar the problem of blind speed arises and pulse radar, In MTI radar there is the blind speed problem can overcome.
3. Pulse radar doesn't transmit the pulse continuously, MTI radar transmits continuously.
4. MTI radar uses low PRF to find the target range; pulse Doppler uses high PRF to find the target range.
5. The MTI radar determines moving targets by detecting the phase and amplitude of the received wave, Pulse radar doesn't determines moving targets by detecting the phase and amplitude of the received wave.

CHAPTER 4
Tracking Radar

Amplitude comparison Mono-Pulse

- In this four feeds are used with one parabolic reflector.
- There are four horn antennas are used.
- The receiver received three types of signal
  1. Sum signal (A+B+C+D)
  2. Azimuth error signal=(A+C)-(B+D)
  3. Elevation error signal=(A+B)-(C+D)

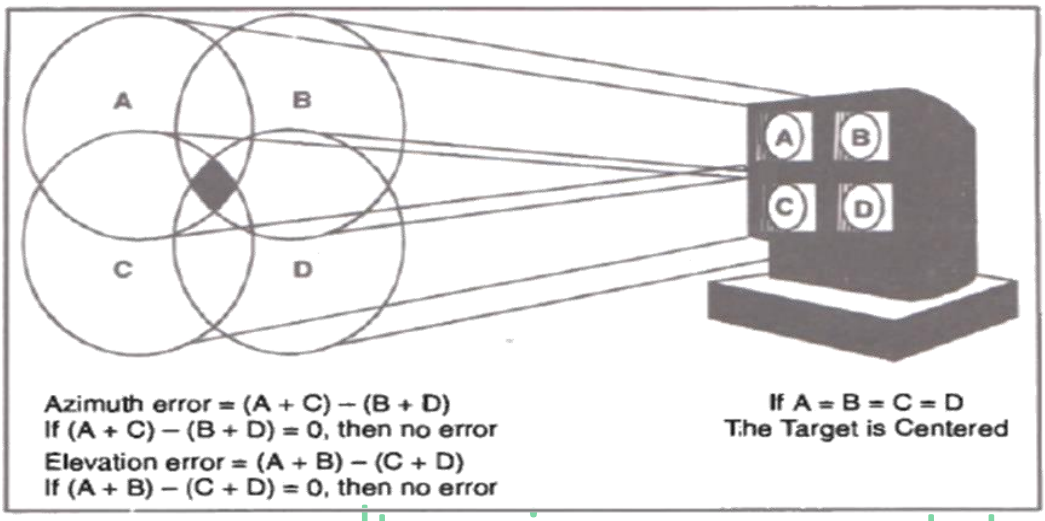

Figure. 28.1. Mono-Pulse radar beam pattern

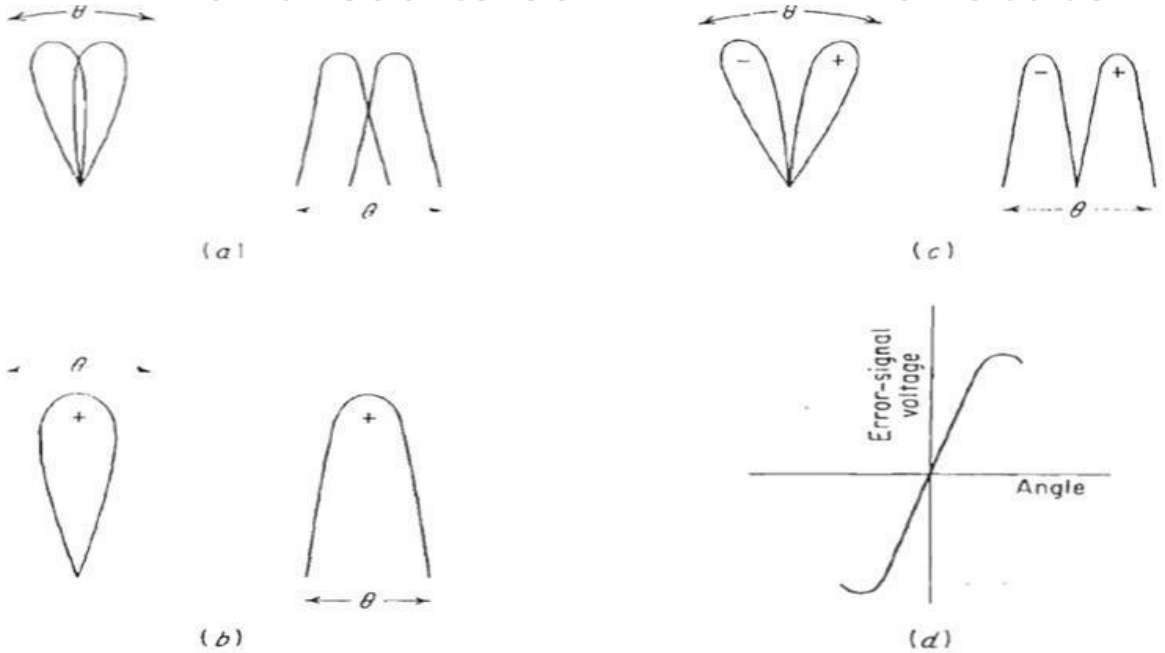

Figure 28.2. (a) Overlapping pattern (b) Sum pattern (c) Difference pattern (d) Error signal

- In this technique it is important that the signal arriving at various feeds are in phase.
- In case of array where the antenna surface is very large signals arriving from different off -axis angles present different phases.
- So their phases need to be equalized before error signal are developed.
- Sum signal is used for transmission and difference signals are used in reception.

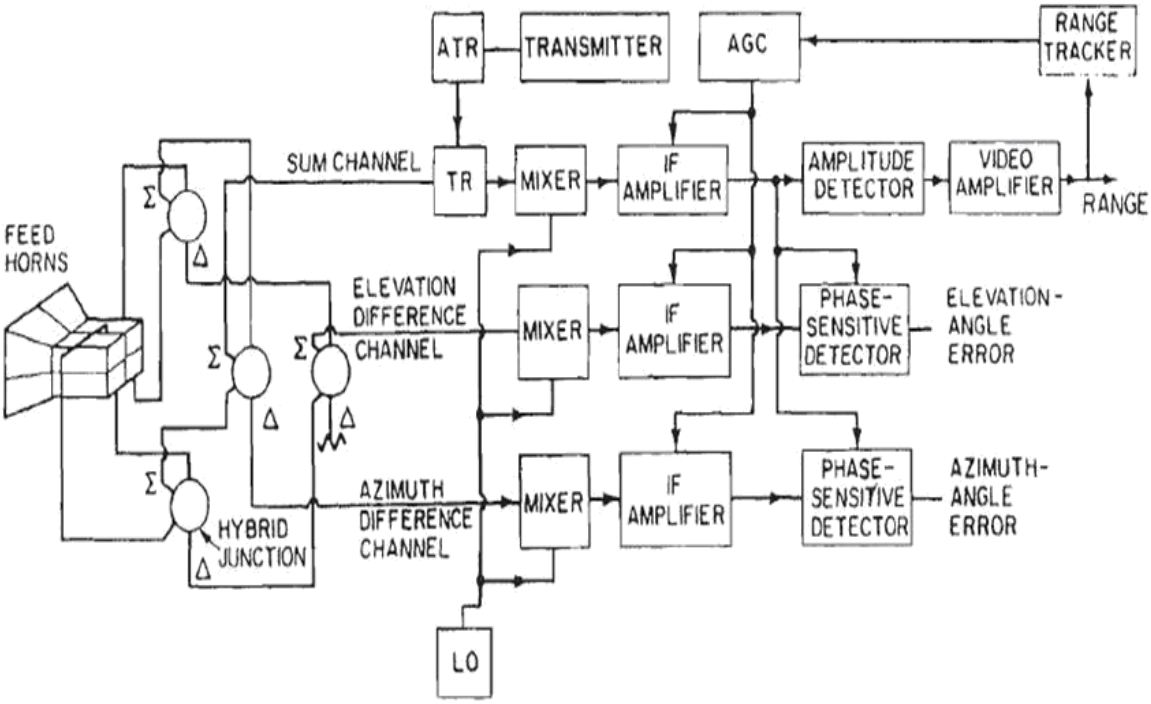

Figure 28.3. Block diagram of amplitude comparison mono-pulse tracking radar

- The receiver has three separate input channel consisting of three mixers, common local oscillator, three IF amplifiers and three detector.
- The elevation and azimuth error signals are used to drive a servo amplifier and a motor in order to position the antenna in the direction of target.

- The o/p of sum channel is used to provide the data generally obtain from a radar receiver so that it can be used to provide the data generally obtain from a radar receiver so that it can be used for application like automatic control of the firing weapon.
- **Advantages:-**
  1. Only one pulse is require to obtain all the information regarding the target and able to locate target in less time comparing other methods.
  2. In this generally error is not occur due to the variation in target cross section.
- **Disadvantage:-**
  1. Two extra Rx channel is required and more complex duplexer feeding arrangement, which makes system bulky and more complex and also expensive.
- **Application:-**
  1. Automatic control of the firing weapon.

Phase comparison Mono-pulse tracking

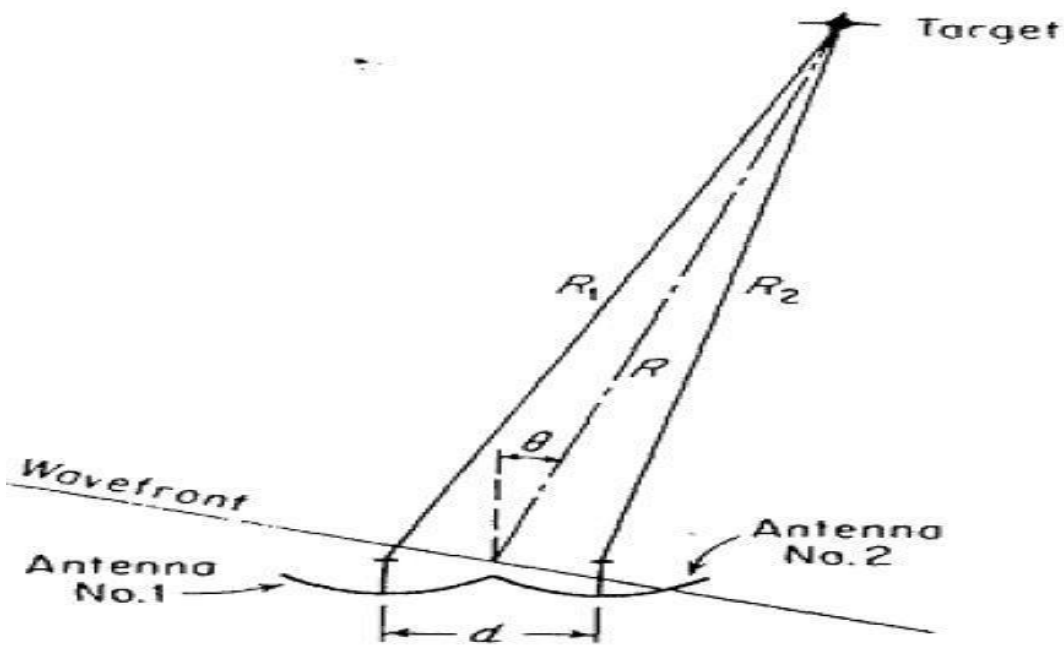

Figure 28.4. Wave front phase relationship for phase comparison monopulse radar

- The measurement of angle of arrival by comparison of the phase relationships in the signals from the separated antennas of a radio interferometer has been widely used by the radio astronomers for precise measurements of the positions of radio stars.

- The interferometer as used by the radio astronomer is a passive instrument, the source of energy being radiated by the target itself. A tracking radar which operates with phase information is similar to an active interferometer and might be called an interferometer radar. It has also been called Simultaneous phase comparison radar, or phase-comparison monopulse.
- In Fig. 4 two antennas are shown separated by a distance d. The distance to the target is R and is assumed large compared with the antenna separation d. The line of sight to the target makes an angle θ to the perpendicular bisector of the line joining the two antennas. The distance from antenna 1 to the target is

$$R_1 = R + (d \sin \theta) / 2$$

And the distance from antenna 2 to the target is

$$R_2 = R - (d \sin \theta) / 2$$

- The phase difference between the echo signals in the two antennas is approximately

$$\Delta\varphi = 2\pi\, d \sin\theta / \lambda$$

- For small angles where sin θ = 0, the phase difference is a linear function of the angular error and may be used to position the antenna via a servo-control loop.

- In the early versions of the phase-comparison monopulse radar, the angular error was determined by measuring the phase difference between the outputs of receivers connected to each antenna.
- The output from one of the antennas was used for transmission and for providing the range information. With such an arrangement it was difficult to obtain the desired aperture illuminations and to maintain a stable bore sight.
- A more satisfactory method of operation is to form the sum and difference patterns in the RF and to process the signals as in conventional amplitude-comparison monopulse radar.

- **Disadvantages:-**
  1. The side lobes levels, which result higher than the signal antenna.
  2. The phase comparisons radar does not usually make efficiently use of the total available antenna aperture.

- **Tracking in Range:**
- The technique for automatically tracking in range is based on the split range gate.
- Two range gates are generated as shown in Fig. One is the early gate, and the other is the late gate.
- The echo pulse is shown in Fig., the relative position of the gates at a particular instant in Fig., and the error signal in Fig. The portion of the signal energy contained in the early gate is less than that in the late gate.

- If the outputs of the two gates are subtracted, an error signal will result which may be used to reposition the centre of the gates.
- The magnitude of the error signal is a measure of the difference between the centre of the pulse and the centre of the gates.
- The sign of the error signal determines the direction in which the gates must be repositioned by a feedback- control system.
- When the error signal is zero the range gates are cantered on the pulse.
- The range gating necessary to perform automatic tracking offers several advantages as by products. It isolates one target excluding targets at other ranges.
- This permits the boxcar generator to be employed. Also range gating improves the signal-to-noise ratio since it eliminates the noise from the other range intervals.
- Hence the width of the gate should be sufficiently narrow to minimize extraneous noise. On the other hand, it must not be so narrow that an appreciable fraction of the signal energy is excluded.
- A reasonable compromise is to make the gate width of the order of the pulse width.

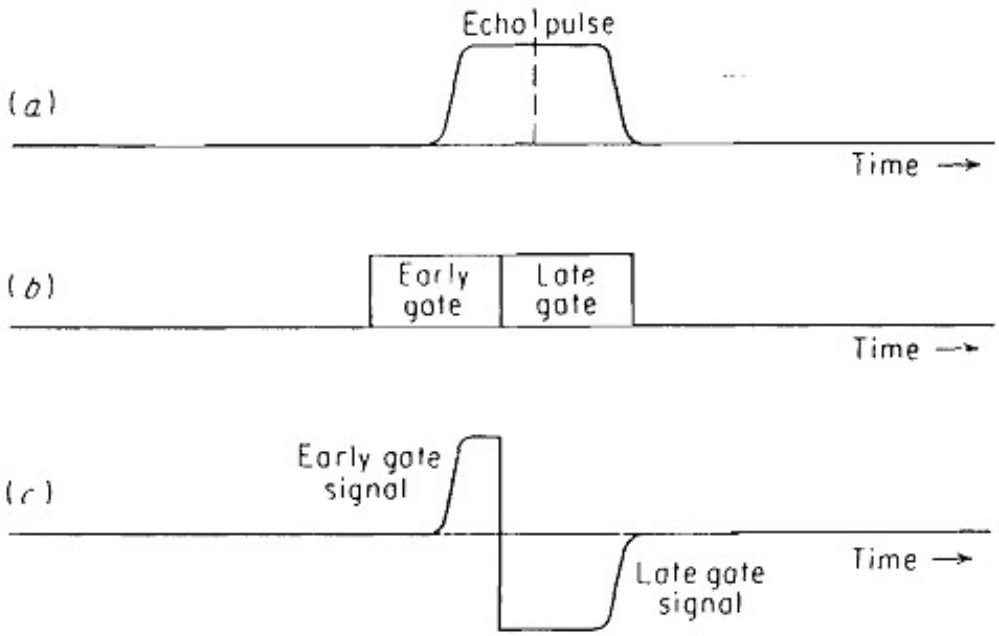

Fig: Split-range-gate tracking (a) Echo pulse; (h) early-late range gates; (c) difference signal between early and late range gates.

- A target of finite length can cause noise in range-tracking circuits in an analogous manner to angle-fluctuation noise (glint) in the angle-tracking circuits.
- Range-tracking noise depends or the length of the target and its shape.
- It has been reported that the rms value of the range noise is approximately 0.8 of the target length when tracking is accomplished with a video split-range- gate error detector.

- **Acquisition:**
- Most tracking radars employ a narrow pencil-beam antenna.
- Examples of the common types of scanning patterns employed with pencil-beam antennas are illustrated in Fig.
- In the **Helical scan**, the antenna is continuously rotated in azimuth while it is simultaneously raised or lowered in elevation. It traces a helix in space.
- Helical scanning was employed for the search mode of the SCR-584 fire-control radar, developed during World War II for the aiming of antiaircraft-gun batteries.
- The SCR-584 antenna was .rotated at the rate of 6 rpm and covered a 20" elevation angle in 1 min.
- The **Palmer scan** derives its name from the familiar penmanship exercises of grammar school days. It consists of a rapid circular scan (conical scan) about the axis of the antenna, combined with a linear movement of the axis of rotation. When the axis of rotation is held stationary, the Palmer scan reduces to the conical scan.
- The Palmer scan is suited to a search area which is larger in one dimension than another.
- The **Spiral scan** covers an angular search volume with circular symmetry.

- Both the spiral scan and the Palmer scan suffer from the disadvantage that all parts of the scan volume do not receive the same energy unless the scanning speed is varied during the scan cycle.
- The **Raster, or TV, scan**, unlike the Palmer or the spiral scan, paints the search area in a uniform manner.
- The raster scan is a simple and convenient means for searching a limited sector, rectangular in shape.
- The nodding scan produced by oscillating the antenna beam rapidly in elevation and slowly in azimuth. Although it may be employed to cover a limited sector-as does the raster scan-nodding scan may also be used to obtain hemispherical coverage, that is, elevation angle extending to 90^0 and the azimuth scan angle to 360^0.

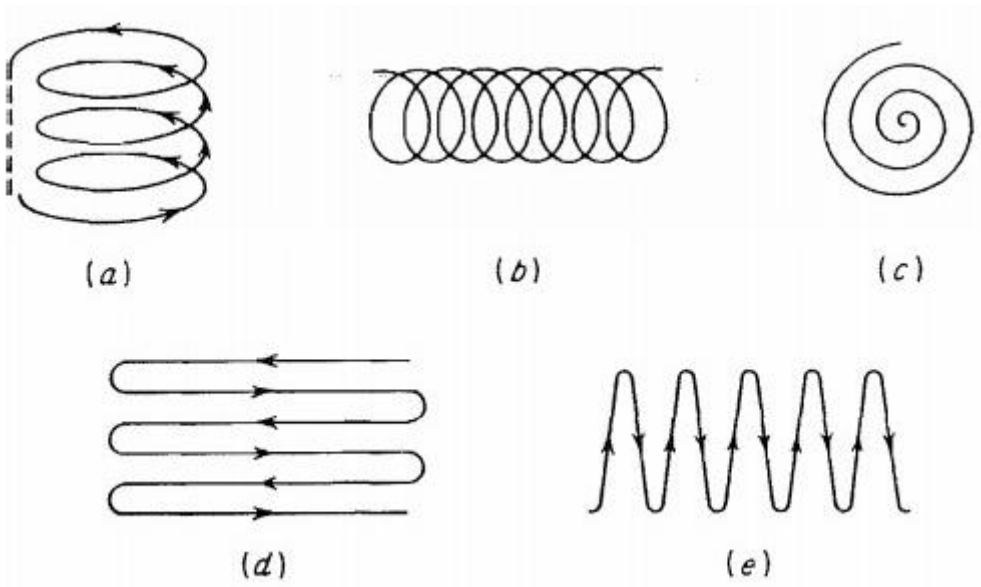

Fig: Examples of acquisition search patterns. (a) Trace of helical scanning beam; (b) Palmer scan; (c) spiral scan; (d) raster, or TV, scan; (e) nodding scan.

- The helical scan and the nodding scan can both be used to obtain hemispheric coverage with a pencil beam.
- The nodding scan is also used with height-finding radars.
- The Palmer, spiral, and raster scans are employed in fire-control tracking radars to assist in the acquisition of the target when the search sector is of limited extent.

- **Target Reflection Characteristics & Angle Accuracy:**

Q: Explain in detail about the limitations to tracking accuracy:

The angular accuracy of tracking radar will be influenced by such factors as

1. The mechanical properties of the radar antenna and pedestal
2. The method by which the angular position of the antenna is measured
3. The quality of the servo system.
4. The stability of the electronic circuits
5. The noise level of the receiver
6. The antenna beam width, atmospheric fluctuations
7. The reflection characteristics of the target.

- These noise like fluctuations are sometimes called tracking Noise, or jitter.
- **A** simple radar target such as a smooth sphere will not cause degradation of the angular tracking accuracy.
- The amplitude of the echo signal from a complex target may vary over wide limits as the aspect changes with respect to the radar. In addition, the effective centre of radar reflection may also change.
- Both of these effects-amplitude fluctuations and wandering of the radar centre of reflection-as well as the limitation imposed by receiver noise can limit the tracking accuracy.

Main limitations to tracking accuracy of radar are,

1. Amplitude fluctuations**.**

2. Angle fluctuations.

3. Receiver and servo noise

Amplitude fluctuations:

- A complex target such as an aircraft or a ship may be considered as a number of independent scattering elements.
- The echo signal can be represented as the vector addition of the contributions from the individual scatterers.
- Consequently, the vector sum, and therefore the amplitude change with changing target aspect.
- Amplitude fluctuations of the echo signal are important in the design of the lobe switching radar and the conical-scan radar but are of little consequence to the monopulse tracker.
- With lobe switching, the minimum time is that necessary to obtain echoes at the four successive angular positions.

- The monopulse radar, on the other hand determines the-angular error on-the-.basis of a single pulse. Its accuracy will therefore not be affected by changes in amplitude with time.
- The percentage modulation of the echo signal due to cross-section amplitude fluctuations is is independent of range if AGC is used. Consequently, the angular error as a result of amplitude fluctuations will also be independent of range.

Angle fluctuations:

- Changes in the target aspect with respect to the radar can cause the apparent centre of radar reflections to wander from one point to another. (The apparent centre of radar reflection is the direction of the antenna when the error signal is zero.)
- In general, the apparent centre of reflection might not correspond to the target centre.
- The random wandering of the apparent radar reflecting centre gives rise to noisy or jittered angle tracking.
- This form of tracking noise is called angle noise, angle scintillations, angle fluctuations, or target glint.
- Angle fluctuations affect all tracking radars whether conical-scan, sequential-lobing, or monopulse.
- Consider a rather simplified model of a complex radar target consisting of two independent isotropic scatterers separated by an angular distance Θ_D as measured from the radar.

- The relative amplitude of the two scatterers is assumed to be ***a,*** and the relative phase difference is α. Differences in phase might be due to differences in range or to reflecting properties.
- The angular error **ΔΘ** as measured from the larger of the two targets is

$$\frac{\Delta\theta}{\theta_D} = \frac{a^2 + a\cos\alpha}{1 + a^2 + 2a\cos\alpha}$$

- When the echo signals from both scatterers are in phase (α = 0***),*** the error reduces to ***a/(a+1)***

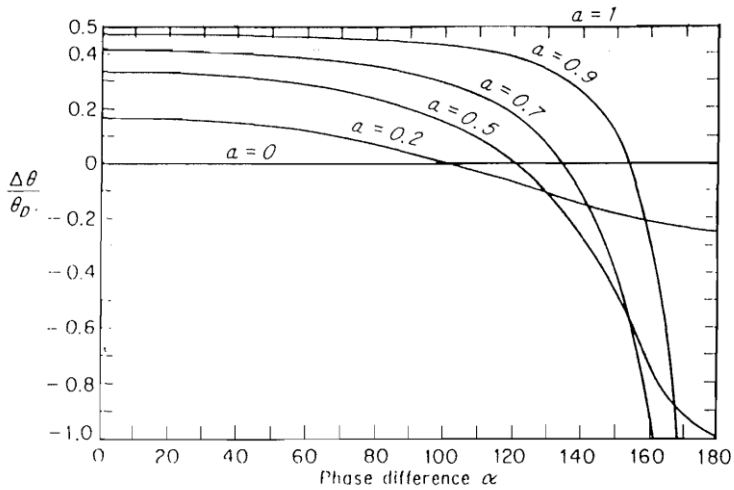

Fig: Plot of $\Delta\Theta / \Theta_D$ versus Phase difference

- Angle fluctuations in tracking radar are reduced by increasing the time constant of the AGC system (Reducing Bandwidth).
- Narrowing the AGC bandwidth generates additional noise in the vicinity of zero frequency, and poorer tracking results.
- Under practical tracking conditions it seems that a wide-bandwidth (short-time constant) AGC should be used to minimize the overall tracking noise.

Receiver and servo noise:

- Another limitation on tracking accuracy is the receiver noise power.
- The accuracy of the angle measurement is inversely proportional to the square root of the signal-to-noise power ratio.
- Since the signal-to-noise ratio is proportional to **1/R4** (from radar equation), the angular error due to receiver noise is proportional to the square of the target distance.
- Servo noise is the hunting action of the tracking servomechanism which results from backlash and compliance in the gears, shafts, and structures of the mount.
- The magnitude of servo noise is essentially independent of the target echo and will therefore be independent of range.

Summary of errors:

- Angle-fluctuation noise varies inversely with range.
- Receiver noise varies as the square of the range.
- Amplitude fluctuations and servo noise are independent of range.

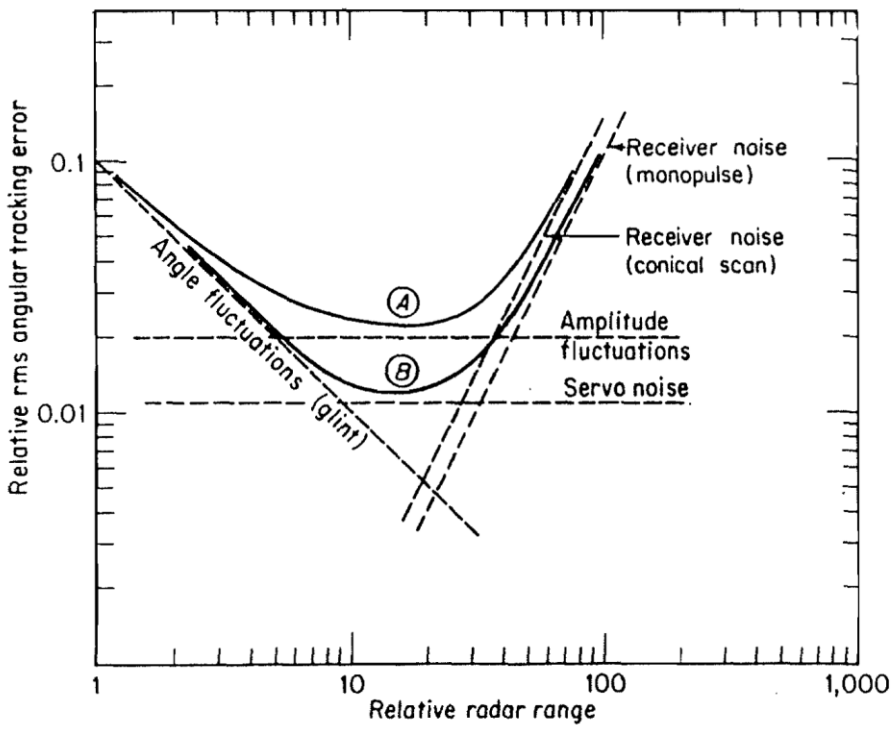

Figure 5.14 Relative contributions to angle tracking error due to amplitude fluctuations, angle fluctuations, receiver noise, and servo noise as a function of range. (A) Composite error for conical-scan or sequential-lobing radar; (B) composite error for monopulse.

Frequency Agility & Glint Reduction:

- The angular error due to glint, which affects all tracking radars, results from the radar receiving the vector sum of the echoes contributed by the individual scattering centres of a complex target.
- If the frequency is changed, the relative phases of the individual scatterers will change and a new resultant is obtained as well as a new angular measurement.
- The improvement***I*** in the tracking accuracy when the frequency is changed pulse-to-pulse is approximately

$$I^2 = \frac{1}{2\Delta f_c / B_{fa} + 2B_g / f_p} \approx \frac{DB_{fa}}{c}$$

where B_{fa} = the frequency agility bandwidth,

D = target depth,

c = velocity of propagation,

B_g = glint bandwidth, and

f_p = pulse repetition frequency.

- the improvement in tracking accuracy is proportional to the square root of the frequency agility bandwidth Iα B_{fa}
- The angular motion of a complex target can be described by a Gaussian random yaw motion of zero mean.

- The model also gives the variance of the inherent glint for a frequency-agile radar as

$$\text{var} = 0.142\gamma_0^2$$

- When angle errors due to glint are large, the received signals are small.

$$\sigma_{rms} \approx \frac{\sigma_g}{N} \qquad 1 \le N \le 4$$

where σ_g is the single-frequency glint error and N is the number of frequencies. The tracking error will not decrease significantly for more than four pulses.

➢ Low Angle Tracking

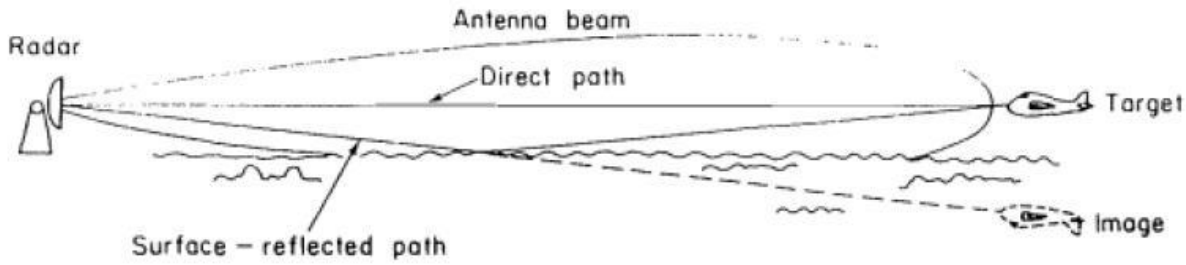

Fig:. Low angle tracking

- A radar that tracks a target at a low elevation angle, near the surface of the earth, can receive two echo signals from the target, Fig. 29.1. One signal is reflected directly from the target, and the other arrives via the earth's surface.

- The direct and the surface-reflected signals combine at the radar to yield angle measurement that differs from the true measurement that would have been made with a single target in the absence of surface reflections.
- The result is an error in the measurement of elevation. The surface-reflected signal may be thought of as originating from the image of the target mirrored by the earth's surface. Thus, the effect on tracking is similar to the two-target model used to describe glint. The surface-reflected signal is sometimes called a multipath signal.
- The surface-reflected signal travels a longer path than the direct signal so that it may be possible in some cases to separate the two in time (range). Tracking on the direct signal avoids the angle errors introduced by the multipath. The range-resolution required to separate the direct from the ground-reflected signal is;

$$\Delta R = 2h_a h_t / R$$

Where,

h_a = radar antenna height,

h_t = target height,

R = range to the target.

- For a radar height of 30 m, a target height of 100 m and a range of 10 km, the range resolution must be 0.6 m, corresponding to a pulse width of 4 ns. This is a much shorter

pulse than is commonly employed in radar. Although the required range-resolutions for a ground based radar are achievable in principle, it is usually not applicable in practice.

- The use of frequency diversity can also reduce the multipath tracking error.

Antenna Introduction:

- An antenna has either to receive energy from an" electromagnetic field or to radiate electromagnetic waves produced by a high frequency generator. Types of antenna mainly depend upon the application of the radar' For example long-range detection radar (surveillance radar) needs large aperture of the antenna.
- The Antenna used normally for radar applications different from the antenna used in communication system' Radar antenna with the shaped directive pattern can be scanned either mechanically or electronically.
- In general an antenna is a transmission device, or transducer, between a guided wave (transmission line) and a free space wave or vice versa. The basic parameter of an antenna will be discussed in the brief in the following section.
- The radar antenna acts as a transducer, which converts electrical pulses from the transmitter to the free space in the form of EM waves and receives the reflected EM signalsfromthetargetinfreespaceandconvertsitintoelectricalsignals.
- In the radar equation we have studied about, the antenna gain and the aperture area of the antenna. For the large antenna gain the effective aperture area of the antenna must be large. Both the parameter is proportional to each other.

- If we say in simple terms, the function of the radar antenna in transmitting mode should concentrate the radiated energy into a shaped beam to the desired direction. And in the receiving mode, from the target and deliver it to the receiver.
- Mostly radars, as we know, are operated in the microwave frequencies region, So the main advantage of microwave frequencies for radar application in that an aperture of relatively small physical size but it is quite large enough in terms of wavelength can be obtained. The antenna having high gain with the narrow beam widths are possible at microwave frequency. But it is quite difficult to achieve at HF.

Antenna Parameters

- Almost all radars use directive antennas for transmission and reception. On transmission, the directive antenna channels the radiated energy into a beam to enhance the energy concentrated in the direction of the target.

Antenna Gain:-

- The antenna gain G is a measure of the power radiated in a particular direction by a directive antenna to the power which would have been radiates in the same direction by an omnidirectional antenna with 100 percent efficiency.
- More precisely, the power gain of an antenna used for transmission is;

$$G(\theta, \phi) = \frac{\text{power radiated per unit solid angle in azimuth } \theta \text{ and elevation } \phi}{\text{power accepted by antenna from its generator}/4\pi}$$

- Note that the antenna gain is a function of direction. If it is greater than unity in some directions, it must be less than unity in other directions. This follows from the conservation of energy.
- One of the basic principles of antenna theory is that of ***reciprocity,*** which states that the properties of an antenna are the same no matter whether it is used for transmission or reception.

Beam Shape:-

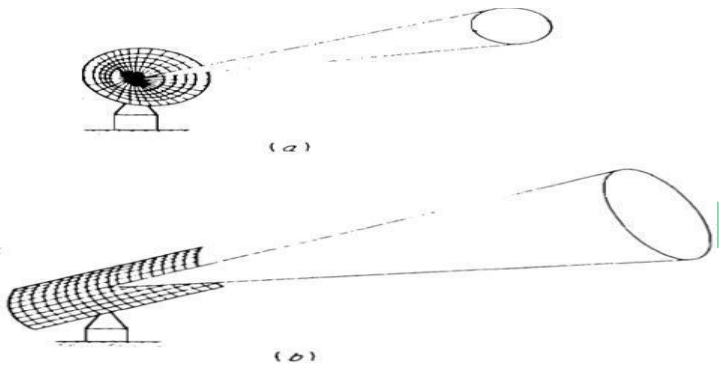

Figure 10.1. (a) Pencil beam antenna pattern (b) Fan beam antenna pattern

- The antenna pattern is a plot of antenna gain as a function of the direction of radiation. (A typical antenna pattern plotted as a function of one angular coordinate is shown in Fig. 10.1
- Antenna beam shapes most commonly employed in radar are the pencil beam (Fig. 10.1(a)) and the fan beam (Fig. 10.1(b)).
- The pencil beam is axially symmetric, or nearly so. Beam widths of typical pencil-beam antennas may be of the order of a few degrees or less.
- Pencil beams arc commonly used where it is necessary to measure continuously the angular position of a target in both azimuth and elevation, as, for example, the target-tracking radar for the control of weapons or missile guidance.
- The pencil beam may be generated with a metallic reflector surface shaped in the form of a paraboloid of revolution with the electromagnetic energy fed from a point source placed at the focus.

- Usually, operational requirements place a restriction on the maximum scan time (time for the beam to return to the same point in space) so that the radar cannot dwell too long at any one radar resolution cell.
- This is especially true if there is a large number of resolution cells to be searched.
- The number of resolution cells can be materially reduced if the narrow angular resolution cell of a pencil-beam radar is replaced by a beam in which one dimension is broad while the other dimension is narrow, that is, a fan-shaped pattern.
- One method of generating a fan beam is with a parabolic reflector shaped to yield the proper ratio between the azimuth and elevation beam widths. Many long-range ground-based search radars use a fan-beam pattern narrow in azimuth and broad in elevation.

Effective Area and Beamwidth:-

- The maximum gain of an antenna is related to its physical area A (aperture) by;

$$G = \frac{4\pi A\rho}{\lambda^2}$$

  Where ρ = antenna efficiency and λ = wavelength of radiated energy.

- A typical reflector antenna with a parabolic shape will produce a beam width approximately equal to;

$$\theta^\circ = \frac{65\lambda}{l}$$

  Where l = dimension of the antenna.

- The intensity of ground clutter echoes may be further enhanced by super refractions effect.

***Radiation pattern of Antenna*:**

A graph or diagram which tells us about the manner in which an antenna radiates power in different directions is known as the Radiation pattern of antenna.

For a receiving antenna the diagram is known as the directional pattern of the antenna.

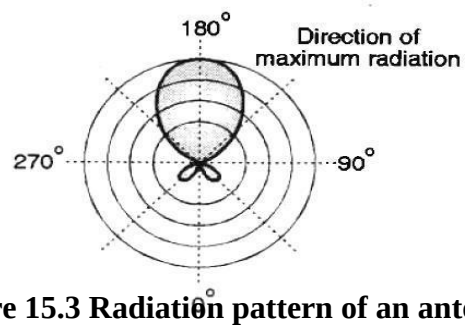

Figure 15.3 Radiation pattern of an antenna

***Directive Gain*:**

The power gain of an antenna is defined as ratio of power fed to an isotropic antenna to the power fed to a directional antenna to develop the same field strength at the same distance, in the Direction of maximum radiation

***Antenna Resistance*:**

The antenna resistance has two components

1. Radiation resistance
2. Resistance due to the actual losses in the antenna.

***Beam width of Antenna*:**

- Beam width of an antenna is defined as the frequency range over which the operation is satisfactory.
- It is the frequency difference between the half power points.
- There are two types of bandwidths. One is related to the radiation pattern and the other one is related to its input impedance.
- The angular separation between two 3 dB down points on the field strength of radiation pattern of antenna.
- Beam width is expressed in degrees.

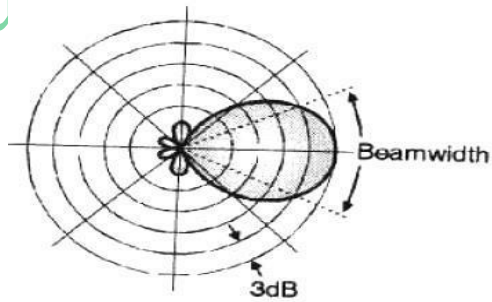

Figure 15.4 Beam width of antenna

➢ Reflector Antenna / Parabolic Antenna

- The parabolic antenna is the form, which is most frequently used as the radar antenna. Figure, illustrates the parabolic antenna. A feed horn as a radiation source is placed at the focal point F that is known as the feed.
- The field leaves this feed horn with a spherical wave front. As each part of the wave front reaches the reflecting surface, it is shifted 180 degrees in phase and sent outward at angles that cause all parts of the field to travel in parallel paths.
- Because of the shape of a parabolic surface, all paths from F(Focus) to the reflector and back are the same length. Due to these characteristics of parabolic it is most suitable for the microwave antenna. This ideal case may not happen in the practice.

- The parabolic antennas pattern has a conical form because of inaccuracies in the production more. This main lobe may vary in angular width from one or two degrees in some radar and it is up to 15 to 20 degrees in other radars.
- Very narrow beams are possible with this type of reflector. Its main application has been for tracking-radar antenna.

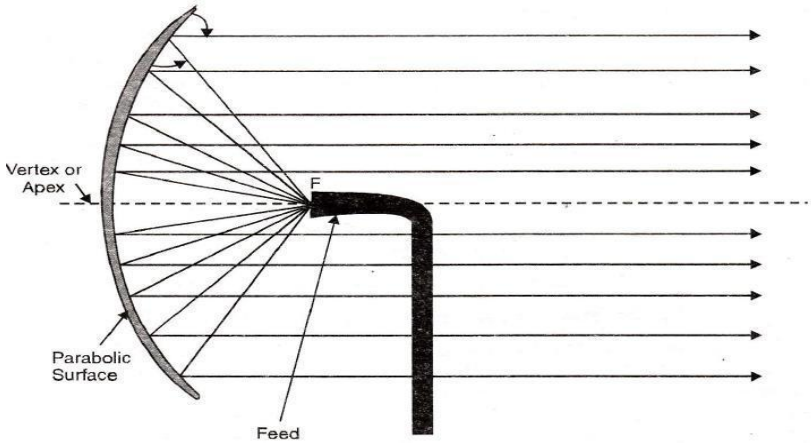

Figure 14.1 Parabolic Antenna

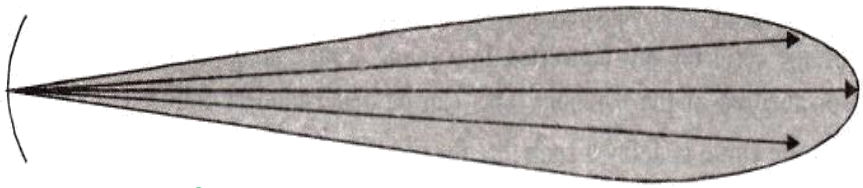

Figure 14.2 Radiation Pattern

- We know that an array of linear antennas can be employed to achieve a directional radiation pattern in which the radiated power is concentrated in a narrow beam. The same directivity objectives can also be achieved by the use of reflectors and lenses.
- Parabolic reflectors are employed when it is convenient to build antennas with apertures of many wavelengths. In case of parabolic reflectors, the surfaces are curved whereas the surface is plane in the antennas discussed previously.
- Arrays are commonly employed at lower frequencies. They are used up to about i000 MHz although in special case they may be used up to 3,000 MHz Reflectors and lenses are more common above 1,000 MHz, although parabolic reflectors are sometimes employed at 100 MHz also. Lenses are basically microwave devices, not ordinarily used below 3000 MHz
- In frequency region around 1000 MHz, tire choice between an array and a paraboloidal reflector may sometimes be difficult. Arrays are employed when scanning by array phasing is desired whereas reflectors are employed when broad band operation or 1ow Noise temperature is desired. Sometimes a combination linear array feed and a parabolic cylinder reflector is employed.

- The principal advantage of lenses over reflector is that the feed and feed support structure do not block the aperture. This is because the rays are transmitted through the lenses rather than retained towards the feed.
- Since feed for lenses can be placed farther off the optical axis, they can also be employed in applications requiring all beam that can be moved regularly with respect to the axis. Further, permissible mechanical tolerances are somewhat greater for lenses than for reflectors.
- On the other hand, lenses are somewhat bulkier and expensive for the same gain and bandwidth as compared to reflectors. But these factors are less significant at very. Short wavelengths, above l0.000MHz-a region in which lenses are most commonly used.

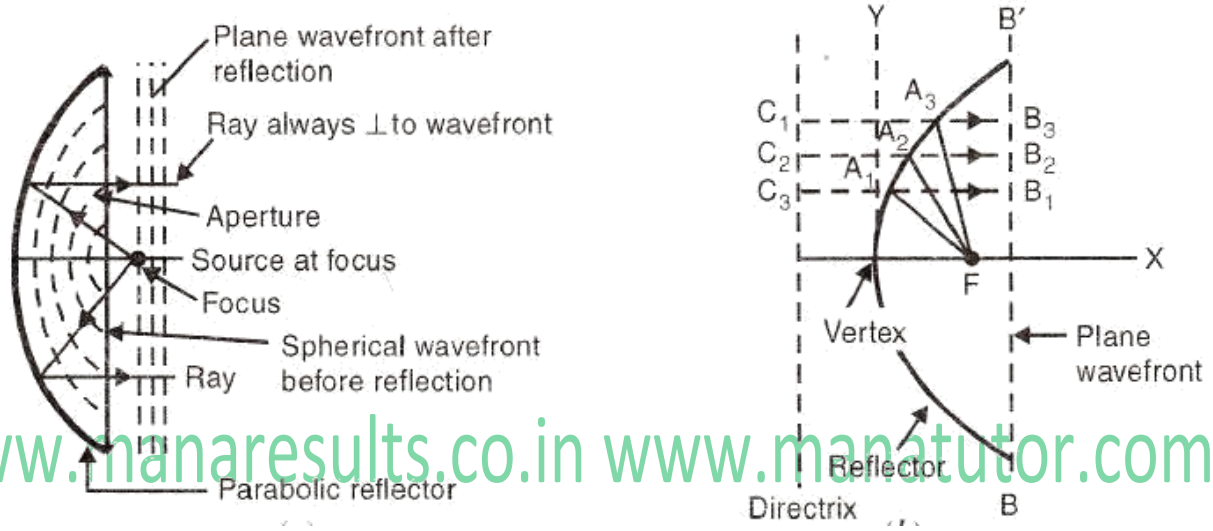

Figure 14.3 Parabolic Reflector Focusing Action

Feeds for Paraboloids:

- The 3 Dimensional representation of parabolic reflector is called Paraboloid.
- The radiation pattern produced by the feed is called the ***Primary Pattern,*** the radiation pattern of the aperture when illuminated by the feed is called the ***Secondary Pattern.***
- ***A*** simple half-wave dipole or a dipole with a parasitic reflector can be used as the feed for a paraboloid.
- A dipole is of limited utility, however, because it is difficult to achieve the desired aperture illuminations, it has poor polarization properties in that some of the energy incident on the reflector is converted to the orthogonal polarization, and it is limited in power.
- The waveguide horn is probably the most popular method of feeding a paraboloid for Radar application.

f/D ratio:

- An important design parameter for reflector antennas is the ratio of the focal length to the antenna diameter D ratio.
- The selection of the proper f/D ratio is based on both mechanical and electrical considerations.
- A small f/D ratio requires a deep-dish reflector, while a large f/D ratio requires a shallow reflector.
- The shallow reflector is easier to support and move mechanically since its centre of gravity is closer to the vertex, but the feed must be supported farther from the reflector.
- The farther from the reflector the feed is placed, the narrower must be the primary-pattern beamwidth and the larger must be the feed.
- On the other hand, it is difficult to obtain a feed with uniform phase over the wide angle necessary to properly illuminate a reflector with small f/D.
- Most parabolic-reflector antennas seem to have f/D ratios ranging from 0.3 to 0.5.

Cassegrain antenna:

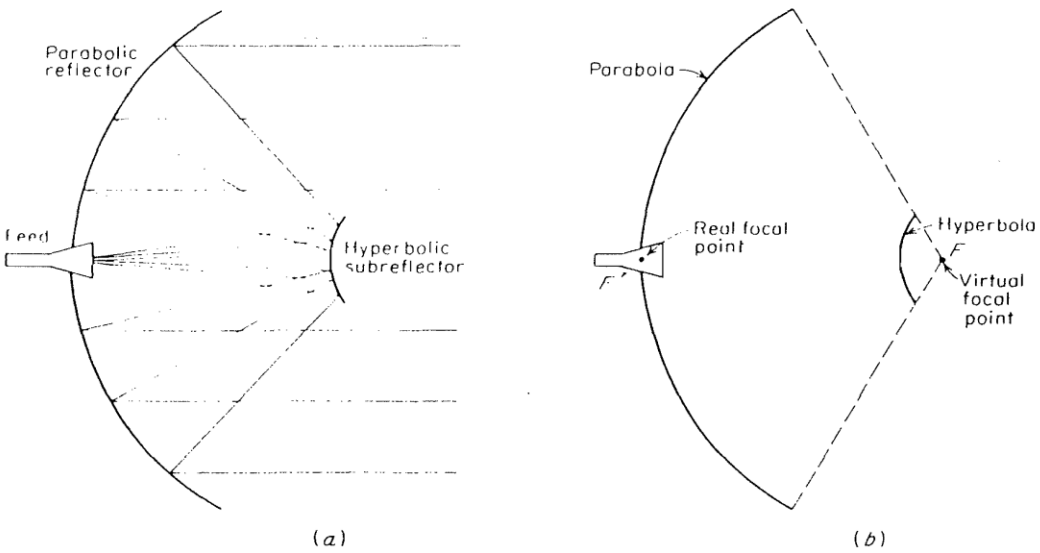

Figure 7.11 (*a*) Cassegrain antenna showing the hyperbolic subreflector and the feed at the vertex of the main parabolic reflector; (*b*) geometry of the Cassegrain antenna.

- It is a two-reflector system with the larger (primary) reflector having a parabolic contour and a (secondary) sub reflector with a hyperbolic contour.
- One of the two foci of the hyperbola is the real focal point of the system.
- The feed is located at this point, which can be at the vertex of the parabola or in front of it.
- The other focus of the hyperbola is a virtual focal point and is located at the focus of the parabolic surface.
- Parallel rays coming from a target are reflected by the parabola as a convergent beam and are re-reflected by the hyperbolic subreflector, converging at the position of the feed.
- There exists a family of hyperbolic surfaces which can serve as the subreflector.

- The larger the subreflector, the nearer will it be to the main reflector and the shorter will be the axial dimension of the antenna assembly.
- However, a large subreflector results in largc apcrture blocking, which may be undesirable.
- A small subreflector reduces aperture blocking, but it has to be supported at a greater distance from the main reflector.

Offset feed:

- Both the aperture blocking and the mismatch at the feed are eliminated with the ***offset-feed*** parabolic antenna shown in Fig.
- The centre of the feed is placed at the focus of the parabola, but the horn is tipped with respect to the parabola's axis. The major portion of the lower half of the parabola is removed, leaving that portion shown by the solid curve in Fig.
- For all practical purposes the feed is out of the path of the reflected energy, so that there is no pattern deterioration due to aperture blocking nor is there any significant amount of energy intercepted by the feed to produce an impedance mismatch.
- It should be noted that the antenna aperture of an offset parabola (or any parabolic reflector) is the area projected on a plane perpendicular to its axis and is not the surface area.
- The offset parabola eliminates two of the major limitations of rear or front feeds.
- However, it introduces problems of its own. Cross-polarization lobes are produced by the offset geometry, which may seriously deteriorate the radar system performance.

- Also, it is usually more difficult to properly support and to scan an offset-feed antenna than a circular paraboloid with rear feed.

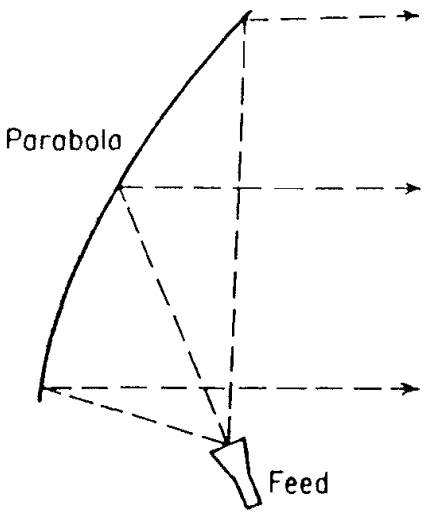

Figure 7.10 Parabolic reflector with offset feed.

➢ LENS ANTENNAS

- Three types of microwave lenses applicable to radar are **(1)** dielectric lenses, (2) metal-plate lenses, and **(3)** lenses with non uniform index of refraction.
- Lens antenna work on the principle of refraction. Lens antennas are made of a dielectric material. Figure 2.1(a) illustrates the principle of operation of such an antenna.
- A point source of radiation is placed at the focus of the km.

- The rays arriving at the lens closer to the edges of the lens encounter a larger curvature as compared to those arming at the centre portion of the lens.
- The rays closer to the edges are refracted more than the rays closer to the censor.
- Similarly, on reception the rays arriving parallel to the lens axis are focused on to the focal point where the feed antenna is placed. Figure 2.1(b) shows that spherical waves emitted by the point source are transformed in to plane waves during transmission.
- The reason for this is that those portions of the wave front closer to the centre are slowed down relatively more than those portions that are closer to the edges, with result that outgoing waves are planar.
- The same way plane waves incident on the lens antenna during reception emerge as spherical waves travelling towards the feed.
- The precision with which these transformations take place depends upon the thickness of the lens in terms of operating wavelength.
- This makes the lens antennas less attractive at lower microwave frequencies.

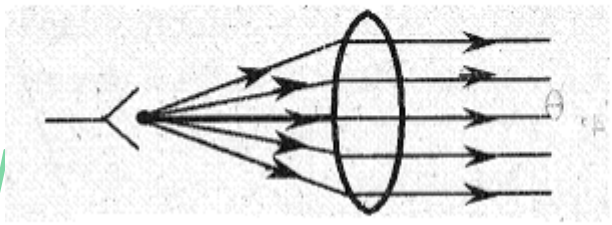

fig2.1(a) Principal of operation of lens antenna

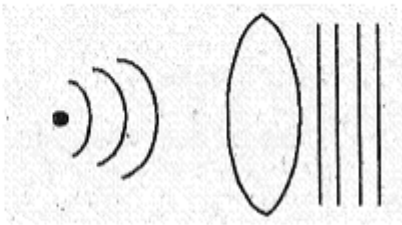

fig 2.1(b) Wave Diagram of lens antenna

Principal of equality of path Lengths:

- All the rays from the source to the plane surface of a lens will have equal path lengths as shown in the figure below.

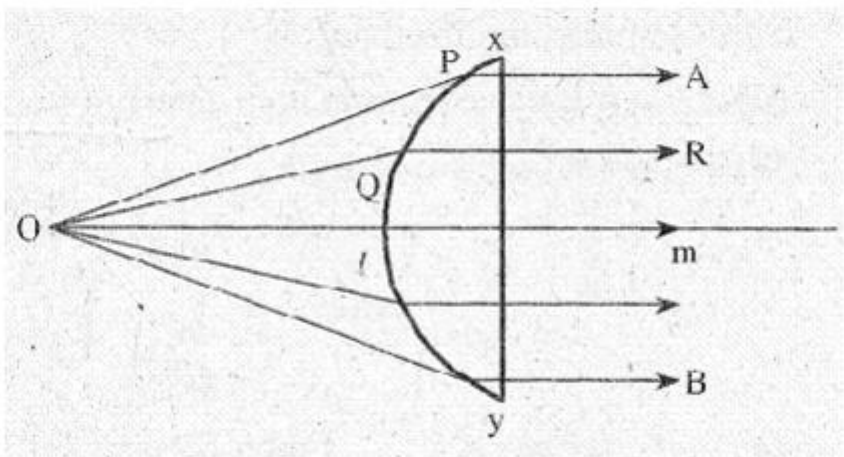

fig 4.1 Equality of path length

- This principle is also applicable if we consider the source of electromagnetic radiations at 'O'.
- Hence, if the waves coming out of 'O' are made to reach the aperture 'xy' at the same time, by properly designing the lens, they will all be in phase producing a uniform beam of radiation.

- The same principle is applicable to the horn antennas. The horn antennas are designed so that the waves coming out of the plane of horn mouth is in phase with a slight deviation (not more than a specified amount).
- This can be achieved by properly selecting the flare angle '2θ'.
- If the flare angle is greater than the optimum value, the waveform on the mouth of the horn will be curved which results in poor directivity.
- If the flare angle is less than optimum, the directivity again decreases due to decrease in aperture area (resulting from small flare angle).
- Hence, by keeping the optimum flare angle of $2\theta=2\tan^{-1}(h/2L)$ Maximum directivity can be achieved.

Dielectric Lens:

- Dielectric lens are also known as "H-plane MetalPlate Lens".
- Here the travelling wave fronts are delayed or retorted by the lens medium.
- Again dielectric lens antennas are classified into two types,
- 1. Non-metallic dielectric lens antennas 2. Metallic dielectric lens antennas.
- **Non-Metallic Dielectric Lens Antennas:** Consider, the general arrangement of non-metallic dielectric lens antenna is shown in fig 10.1

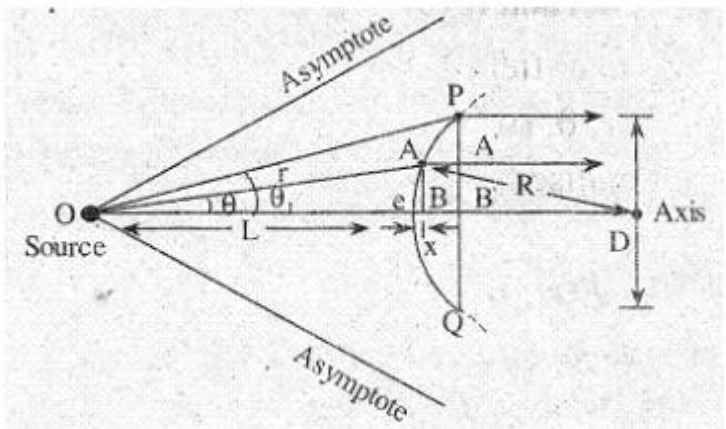

fig 10.1 A non-metallic dielectric lens antenna

Here source is located at point O, the rays are incident on the plane surface PQ of the lens. The rays emerging from source have equal distance and constant phase. According to the geometry,

$$OA + AA' = OC + CE = OC + CB + B\,B1$$

since From figure,

$$AA' = BB1$$

$$OA + AA' = OC + CB + BB1$$

$$OA = O\,C + CB$$

Here, c = Velocity of wave in air

v = Velocity of wave in lens medium Multiplying "c" on both side

$$c\left(\frac{r}{c}\right) = c.\frac{L}{c} + c.\frac{x}{v}$$

$$(r) = L + \frac{x.c}{v}$$

$r = L + x(\mu)$ since $\mu = \left(\frac{c}{v}\right)$

$r = L + \mu(r\cos\theta - L)$ since $x = \mu(r\cos\theta - L)$

$r = L + \mu r\cos\theta - \mu L$

Therefore $r = \frac{L(1-\mu)}{\mu\cos\theta - 1}$

The above expression represents the contour of lens in polar coordinates

b) **Metallic Dielectric Lens Antennas:**

- The metallic dielectric lenses are made with discrete metal particles of microscopic size.
- The particles should be so small compared to the design wave length that the maximum particle dimension (parallel to the E-field) is less than λ and the spacing to avoid diffraction effects.

Zoning of Lenses:

The thickness of lens antennas can be reduced with the help of zoning. Thickness (t) is given by,

The thickness of lens antennas can be reduced with the help of zoning. Thickness (*t*) is given by

$$t = \frac{\lambda}{\mu - 1}$$

Where,

t = Thickness

λ= Free space wavelength

μ = Refractive index =(*c/v*)

Zoning is classified into two types

(i) Curved surface zoning

(ii) Plane surface zoning.

(a) Curved Surface Zoning

1. In curved, surface zoning stepping or zoning is done to the curved surface of lens antenna.
2. Thickness of curved surface zoned lens is $t = \frac{\lambda}{\mu - 1}$
3. Curved surface zoned lens is mechanically stronger than the plane surface zoned lens,
4. Curved surface zoning lens antennas have less weight and less power dissipation

fig 1.1 Curved Surface Zoining

(b) Plane Surface Zoning:

1. In plane surface zoning stepping or zoning is done to the plane surface.

2 .Thickness of plane surface zoned lens is,

$$t = \frac{\lambda}{\mu - 1}$$

3. Plane surface zoned lens is less strong

4. Here the power dissipation is more.

Example

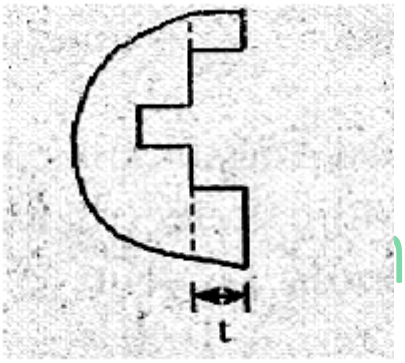

fig 1.2 Plane surface zoining

Curved surface zoning is preferable compared to t he plane surface zoning.

Advantages of Zoning:

1. This process reduces the weight of lens considerably.

2. The zoned dielectric lens antenna ensures that signals are in phase after emergence, despite difference in appearance.

3. The zoned lens is having less power dissipation.

Disadvantage:

The zoned lens antennas are frequency sensitive i.e., they are dependent on wavelength, λ

➢ Cosecant-Squared Antenna Pattern:-

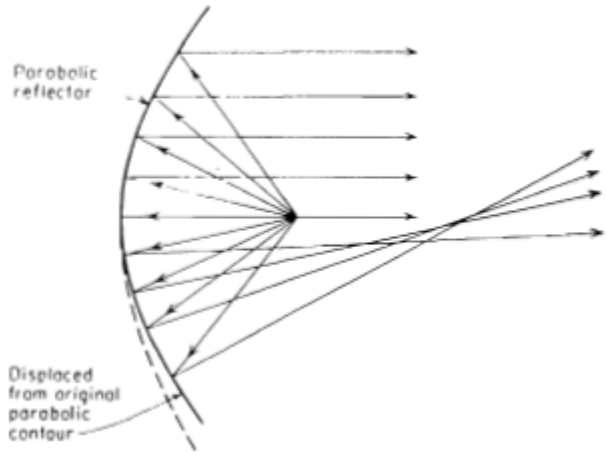

Figure 7.24 Cosecant-squared antenna produced by displacing the reflector surface from the original parabolic shape.

- The cosecant-squared pattern may be approximated with a reflector antenna by shaping the surface or by using more than one feed.
- A cosecant-squared antenna pattern can also be produced by feeding the parabolic Reflector with two or more horns or with a linear array.
- If the horns are spaced and **fed** properly, the combination of the secondary beams will give a smooth cosecant-squared pattern over some range of angle.
- The coverage of a simple fan beam is usually inadequate for targets at high altitudes close to the radar. The simple fan-beam antenna radiates very little of its energy in this direction.

$$G(\phi) = G(\phi_0)\frac{\csc^2\phi}{\csc^2\phi_0} \qquad \text{for } \phi_0 < \phi < \phi_m$$

Where G(φ) = gain at elevation angle φ, and φ_0 and φ_m, are the angular limits between which the beam follows a $\csc^2$ shape.

- From φ = 0 to φ = φ0, the antenna pattern is similar to a normal antenna pattern. But from φ = 0 to φ = φ_m the antenna gain varies as $\csc^2\varphi$.
- Ideally, the upper limit φ_m, should be 90°.But it is always less than this with a single antenna because of practical difficulties.
- The cosecant-squared antenna has the important property that the echo power P, received from a target of constant cross section at constant altitude *h* is independent of the target's range R from the radar. Substituting the gain of the cosecant-squared antenna [above eq.] into the simple radar equation gives;

$$P_r = \frac{P_t G^2(\phi_0)\csc^4\phi\lambda^2\sigma}{(4\pi)^3\csc^4\phi_0 R^4} = K_1\frac{\csc^4\phi}{R^4}$$

Where K_1 is a constant. The height h of the target is assumed constant, and since csc φ= R/h, the received power becomes

$$P_r = K_1/h^4 = K_2$$

Where K_2 constant.

➢ RADOMES:

- Antennas which must be operated in severe weather are usually enclosed for protection in a sheltering structure called a radome.
- Radomes must be mechanically strong if they are to provide the necessary protection, yet they must not interfere with the normal operation of the antenna.
- Antennas mounted on aircraft must also be housed within a radome to offer protection from large aerodynamic loads and to avoid disturbance to the control of the aircraft and minimize drag.
- The design of radomes for antennas may be divided into two separate and relatively distinct classes, depending upon whether the antenna is for airborne or ground-based (or ship-based) application.
- The airborne radome is characterized by smaller size than ground based radomes since the antennas that can be carried in an aircraft are generally smaller.
- The presence of a radome can affect the gain, beamwidth, sidelobe level, and the direction of the boresight pointing direction), as well as the VSWR and change in antenna noise temperature.
- Radar antennas located on the nose of the aircraft require an ogive-shaped which does not present the same environment for all beam positions.
- When the antenna is directed forward the angle of incidence on the radome surface can be in excess of 80". In other look directions the incidence might be zero degrees.
- A radome permits a ground-based radar antenna to operate in the presence of high winds. It also prevents ice formation on the antenna.
- The shape of a radome for a ground-based antenna is usually a portion of a sphere.
- The sphere is a good mechanical structure and offers aerodynamic advantage in high winds.
- The first large radomes (50-ft diameter or more) for ground-based radar antennas appeared shortly after World War **II.**
- They were constructed of a strong, flexible rubberized airtight material and were supported by air pressure from within.
- **Air-supported radomes** have a number of disadvantages.
- Their life is limited by exposure to ultraviolet light, surface erosion and the constant flexing of the material in the wind.
- In high winds the material can be damaged by flying debris and the rotation of the antenna might have to cease to prevent the fabric from being blown against the antenna and torn.
- Maintenance of the internal pressure in high winds can sometimes be difficult. Another problem is that costly maintenance is required at frequent intervals.
- The limitations of air-supported radomes are overcome by the use of **rigid self-supporting radomes.**

- A metal space-frame radsme might consist of individual triangular panels made up of frame of aluminum extrusions encapsulating a low-loss dielectric reinforced plastics laminate membrane.

- The rubberized air-supported radome is an example of a *thin wall* radome in which the thickness of the wall is small compared to a wavelength.

Ground-based radomes may utilize foam materials, such as polyester polyurethane, of low dielectric constant and low loss tangent in a relatively thick-wall construction to meet structural requirements with excellent electrical performance over a wide frequency band.

In conventional application, the radome is fixed and the antenna is scanned. It is sometimes of advantage to construct the antenna and radome to rotate together as a unit. This is called a *rotodome*. They have been used in ground-based systems as well as in airborne aircraft-surveillance radars such as the 24-ft-diameter radome in the U.S. Navy's E-2C

UNIT-VI
RADAR DISPLAYS

NOISE FIGURE

the noise figure of a receiver was described as a measure of the noise produced by a practical receiver as compared with the noise of an ideal receiver.[1,2] The noise figure F_n of a linear network may be defined as

$$F_n = \frac{S_{in}/N_{in}}{S_{out}/N_{out}} = \frac{N_{out}}{kT_0 B_n G} \tag{9.1}$$

where S_{in} = available input signal power
N_{in} = available input noise power (equal to $kT_0 B_n$)
S_{out} = available output signal power
N_{out} = available output noise power

"Available power" refers to the power which would be delivered to a matched load. The available gain G is equal to S_{out}/S_{in}, k = Boltzmann's constant = 1.38×10^{-23} J/deg, T_0 = standard temperature of 290 K (approximately room temperature), and B_n is the noise bandwidth defined by Eq. (2.3). The product $kT_0 \approx 4 \times 10^{-21}$ W/Hz. The purpose for defining a standard temperature is to refer any measurements to a common basis of comparison. Equation (9.1) permits two different but equivalent interpretations of noise figure. It may be considered as the degradation of the signal-to-noise ratio caused by the network (receiver), or it may be interpreted as the ratio of the actual available output noise power to the noise power which would be available if the network merely amplified the thermal noise. The noise figure may also be written

$$F_n = \frac{kT_0 B_n G + \Delta N}{kT_0 B_n G} = 1 + \frac{\Delta N}{kT_0 B_n G} \tag{9.2}$$

where ΔN is the additional noise introduced by the network itself.

The noise figure is commonly expressed in decibels, that is, 10 log F_n. The term *noise factor* is also used at times instead of noise figure. The two terms are now synonymous.

The definition of noise figure assumes the input and output of the network are matched. In some devices, less noise is obtained under mismatched, rather than matched, conditions. In spite of definitions, such networks would be operated so as to achieve the maximum output signal-to-noise ratio.

Noise figure of networks in cascade. Consider two networks in cascade, each with the same noise bandwidth B_n but with different noise figures and available gain (Fig. 9.1). Let F_1, G_1 be the noise figure and available gain, respectively, of the first network, and F_2, G_2 be similar parameters for the second network. The problem is to find F_o, the overall noise-figure of the two circuits in cascade. From the definition of noise figure [Eq. (9.1)] the output noise N_o of the two circuits in cascade is

$$N_o = F_o G_1 G_2 k T_0 B_n = \text{noise from network 1 at output of network 2} + \text{noise } \Delta N_2 \text{ introduced by network 2} \quad (9.3a)$$

$$N_o = k T_0 B_n F_1 G_1 G_2 + \Delta N_2 = k T_0 B_n F_1 G_1 G_2 + (F_2 - 1) k T_0 B_n G_2 \quad (9.3b)$$

or

$$F_o = F_1 + \frac{F_2 - 1}{G_1} \quad , \quad (9.4)$$

The contribution of the second network to the overall noise-figure may be made negligible if the gain of the first network is large. This is of importance in the design of multistage receivers. It is not sufficient that only the first stage of a low-noise receiver have a small noise figure. The succeeding stage must also have a small noise figure, or else the gain of the first stage must be high enough to swamp the noise of the succeeding stage. If the first network is not an amplifier but is a network with loss (as in a crystal mixer), the gain G_1 should be interpreted as a number less than unity.

The noise figure of N networks in cascade may be shown to be

$$F_o = F_1 + \frac{F_2 - 1}{G_1} + \frac{F_3 - 1}{G_1 G_2} + \cdots + \frac{F_N - 1}{G_1 G_2 \cdots G_{N-1}} \quad (9.5)$$

Similar expressions may be derived when bandwidths and/or the temperature of the individual networks are not the same.[3]

Noise temperature. The noise introduced by a network may also be expressed as an *effective noise temperature*, T_e, defined as that (fictional) temperature at the input of the network which would account for the noise ΔN at the output. Therefore $\Delta N = kT_e B_n G$ and

$$F_n = 1 + \frac{T_e}{T_0} \tag{9.6}$$

$$T_e = (F_n - 1)T_0 \tag{9.7}$$

The *system noise temperature* T_s is defined as the effective noise temperature of the receiver system including the effects of antenna temperature T_a. (It is also sometimes called the system

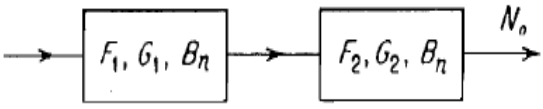

Figure 9.1 Two networks in cascade.

operating noise temperature.[60]) If the receiver effective noise temperature is T_e, then

$$T_s = T_a + T_e = T_0 F_s \tag{9.8}$$

where F_s is the *system noise-figure* including the effect of antenna temperature.

The effective noise temperature of a receiver consisting of a number of networks in cascade is

$$T_e = T_1 + \frac{T_2}{G_1} + \frac{T_3}{G_1 G_2} + \cdots \tag{9.9}$$

where T_i and G_i are the effective noise temperature and gain of the ith network.

The effective noise temperature and the noise figure both describe the same characteristic of a network. In general, the effective noise temperature has been preferred for describing low-noise devices, and the noise figure is preferred for conventional receivers. For radar receivers the noise figure is the more widely used term, and is what is used in this text.

RADAR DISPLAYS

INTRODUCTION: Originally the radar display had the important purpose of visually presenting the output of the radar receiver in a form such that an operator could readily and accurately detect the presence of a target and extract information about its location. The display had to be designed so as not to degrade the radar information and to make it easy for the operator to perform with effectiveness the detection and information extraction function.

When the display is connected directly to the output of the radar receiver without

further processing, the output is called raw video.

When the receiver output is first processed by an automatic detector or an automatic detector and tracker before display, it is called synthetic video or processed video.

The requirements for the display differ somewhat depending whether raw or processed video is displayed. Some radar operators prefer to see on a display the raw video lightly superimposed on the processed video.

The radar display is now more like the familiar television monitor or computer display that shows the entire scene continuously rather than just indicates the echoes from the region currently illuminated by the narrow antenna beam. Thus the role of the display has changed as the need for operator interpretation has decreased.

Types of Displays

Given below are some of the more popular formats that have been employed by IEEE uses the term "display" in its definitions but here we use either "scope" or "display" depending on what is perceived to be the more common usage.

A-scope.

A deflection-modulated rectangular display in which the vertical deflection is proportional to the amplitude of the receiver output and the horizontal coordinate is proportional to range (or time delay). This display is well suited to a staring or manually tracking radar, but it is not appropriate for continually scanning surveillance radar since the ever-changing background scene makes it difficult to detect targets and interpret what the display is seeing.

B-scope.

An intensity-modulated rectangular display with azimuth angle indicated by one coordinate (usually horizontal) and range by the orthogonal coordinate (usually vertical). It has been used in airborne military radar where the range and angle to the target are more important than concern about distortion in the angle dimension.

C-scope.

A two-angle intensity-modulated rectangular display with azimuth angle indicated by the horizontal coordinate and elevation angle by the vertical coordinate. One application is for airborne intercept radar since the display is similar to what a pilot might see when looking through the windshield. It is sometimes projected on the windshield as a heads-up display. The range coordinate is collapsed on this display so a collapsing loss might occur, depending how the radar information is processed.

D-scope. A C-scope in which the blips extend vertically to give a rough estimate of distance

E-scope.

An intensity-modulated rectangular display with range indicated by the horizontal coordinate and

elevation angle by the vertical coordinate. The E-scope provides a vertical profile of the radar coverage at a particular azimuth. It is of interest with 3D radars and in military airborne terrain-following radar systems in which the radar antenna is scanned in elevation to obtain vertical profiles of the terrain ahead of the aircraft. The E-scope is related to the RHI display.

F-Scope *:*

A rectangular display in which a target appears as a centralized blip when the radar antenna is aimed at it. Horizontal and vertical aiming errors are respectively indicated by the horizontal and vertical displacement of the blip.

G-Scope. A rectangular display in which a target appears as a laterally centralized blip when the radar antenna is aimed a1 it in azimuth, and wings appear to grow on the pip as the distance to the target is diminished; horizontal and vertical aiming errors are respectively indicated by horizontal and vertical displacement of the blip.

H-scope. A B-scope modified to include indication of angle of elevation. The target appears as two closely spaced blips which approximate a short bright line, the slope of which is in proportion to the sine of the angle of target elevation.

I-scope. ***A*** display in which a target appears as a complete circle when the radar antenna is pointed at it and in which the radius of the circle is proportional to target distance; incorrect aiming of the antenna changes the circle to a segment whose arc length is inversely proportional to the magnitude of the pointing error, and the position of the segment indicates the reciprocal of the pointing direction of the antenna.

J-scope. A modified A-scope in which the time base is a circle and targets appear as radial deflections from the time base.

K-scope. A modified A-scope in which a target appears as a pair of vertical deflections. When the radar antenna is correctly pointed at the target, the two deflections are of equal height, and when not so pointed, the difference in deflection amplitude is an indication of the direction and magnitude of the pointing error.

L-scope. A display in which a target appears as two horizontal blips, one extending to the right from a central vertical time base and the other to the left; both blips are of equal amplitude when the radar is pointed directly at the target, any inequality representing relative pointing error, and distance upward along the baseline representing target distance.

M-scope. A type of A-scope in which the target distance is determined by moving an adjustable pedestal signal along the baseline until it coincides with the horizontal position of the target signal deflections the control which moves the pedestal is calibrated in distance.

N-scope. A K-scope having an adjustable pedestal signal, as in the M-scope, for the

measurement of distance.

O-scope. An A-scope modified by the inclusion of an adjustable notch for measuring distance.

PPI-display, or plan-position indicator.

An intensity-modulated circular display in which echo signals from reflecting objects are shown in plan view with range and azimuth angle displayed in polar (rho-theta) coordinates to form a map-like display. Usually the center of the display is the location of the radar. A sector-scan PPI might be used with a forward-looking airborne radar to provide surveillance or ground mapping over a limited azimuth sector. An offset PPI is one where the origin (or location of the radar) is at a location other than the center of the display.

This provides a larger display area for a selected portion of the coverage. The location of the radar with an offset PPI may be outside the face of the display.

RHI-display, or range-height indicator.

An intensity-modulated rectangular display with height (target altitude) as the vertical axis and range as the horizontal axis. The scale of the height coordinate is usually expanded relative to the range coordinate. It has been used with meteorological radars to observe the vertical profile of weather echoes.

R-scope. An A-scope with a segment of the time base expanded near the blip for greater accuracy in distance measurement.

RNI, or **Range-Height Indicator.** An intensity modulated display with height (altitude) as the vertical axis and range as the horizontal axis.

DUPLEXERS

Pulsed radar can time share a single antenna between the transmitter and receiver by employing a fast-acting switching device called a duplexer.

On transmission the duplexer must protect the receiver from damage or burnout, and on reception it must channel the echo signal to the receiver and not to the transmitter. Furthermore it must accomplish the switching rapidly, in microseconds or nanoseconds, and it should be of low loss.

For high power applications, the duplexer is a gas-discharge device called a TR (transmit-receive) switch. The high-power pulse from the transmitter causes the gas-discharge device to break down and short circuit the receiver to protect it from damage. On receive; the RF circuitry of the "cold" duplexer directs the echo signal to the receiver rather than the transmitter. Solid-state devices have also been used in duplexers. In a typical duplexer application, the transmitter peak power might be a megawatt or more, and the maximum safe power that can be tolerated by the receiver might be less than a watt. The duplexer, therefore, must' provide more than 60 to 70 dB of isolation between the transmitter and recovery with negligible loss on

transmit and receive.

1. **Branch-type duplexers.**

The branch-type duplexer, diagrammed in Fig. 1 was one of the earliest duplexer configurations employed. It consists of a TR (transmit-receive) switch and an ATR (anti-transmit receive) switch, both of which are gas-discharge tubes. When the transmitter is turned on, the TR and the ATR tubes ionize; that is, they break down, or fire. The TK in the fired condition acts as a short circuit to prevent transmitter power from entering the receiver. Since the TR is located a quarter wavelength from the main transmission line, it appears as a short circuit at the receiver but as an open circuit at the transmission line so that it does not impede the flow of transmitter power. Since the ATR is displaced a quarter wavelength from the main transmission line, the short circuit it produces during the fired condition appears as an open circuit on the transmission line and thus has no effect on transmission.

During reception, the transmitter is off and neither the TR nor the ATR is fired. The open circuit of the ATR, being a quarter wave from the transmission line, appears as a short circuit across the line. Since this short circuit is located a quarter wave from the receiver branch-line, the transmitter is effectively disconnected from the line and the echo signal power is directed to the receiver. The diagram of Fig. 1 is a parallel configuration. Series or series-parallel configurations are possible.

The branch-type duplexer is of limited bandwidth and power-handling capability, and has generally been replaced by the balanced duplexer and other protection devices. It is used, inspite of these limitations, in some low-cost radars.

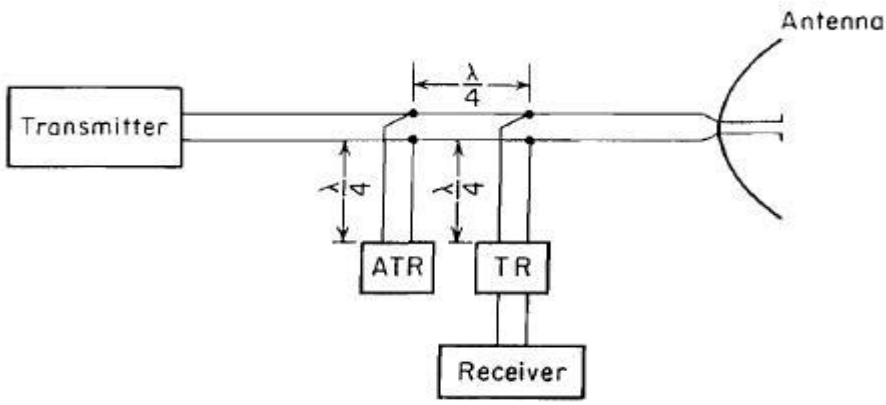

Fig.1 Branch type duplexeer

2. **Balanced Duplexer:**

The balanced duplexer shown in Fig.2a, is based on the short slot hybrid junction which consists of two sections of waveguides joined along one of their narrow walls with a slot cut in the common wall to provide coupling between the two(The short-slot hybrid junction may be thought of as a broadband directional coupler with a coupling ratio of 3 dB.) Two TR tubes are used, one in each section of waveguide.

In the transmit condition, Fig.2a, power is divided equally into each waveguide by the first hybrid junction (on the left). Both gas-discharge TR tubes break down and reflect the incident power out the antenna arm as shown. The short-slot hybrid junction has the property that each time power passes through the slot in either direction, its phase is advanced by 90°. The power travels as indicated by the solid lines. Any power that leaks through the TR tubes (shown by the dashed lines) is directed to the arm with the matched dummy load and not to the receiver. In addition to the attenuation provided by the TR tubes, the hybrid junctions provide an additional 20 to 30 dB of isolation.

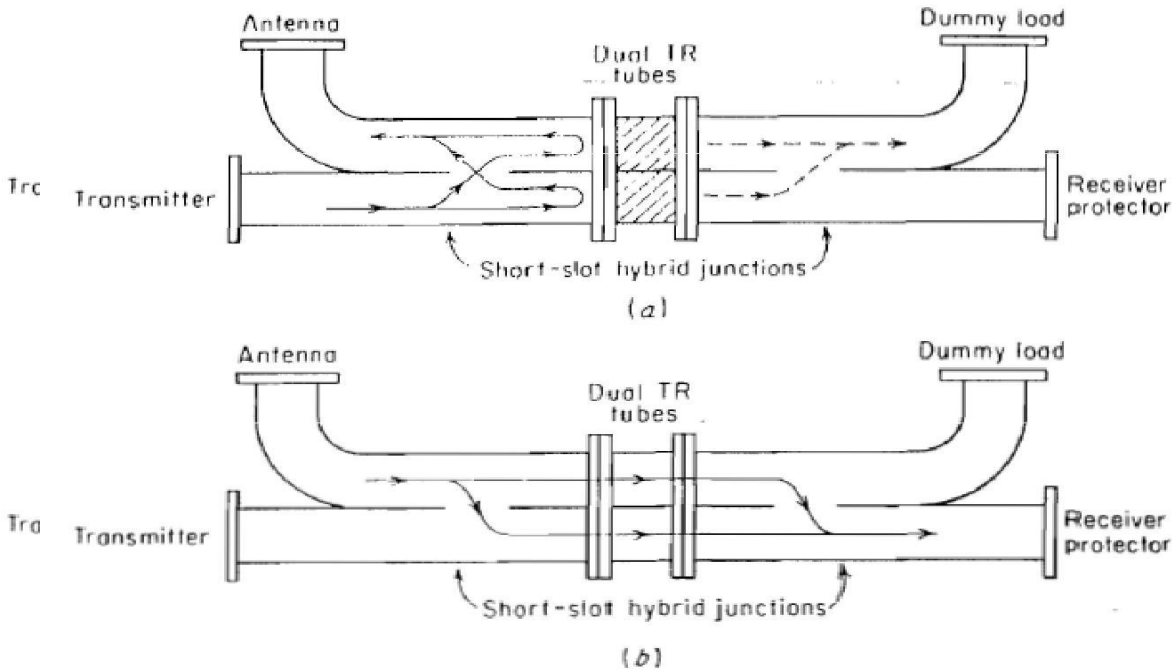

Figure.2. Balanced duplexer using dual TR tubes and two short-slot hybrid junctions. (a) Transmit condition and (b) receive condition.

On reception the TR tubes do not fire and the echo signals pass through the duplexer and into the receiver as shown in Fig.2b. The power splits equally at the first junction and because of the 90° phase advance on passing through the slot, the signal recombines in the receiving arm and not in the arm with the dummy load.

The balanced duplexer is a popular form of duplexer with good power handling capability and wide bandwidth.

CIRCULATOR AS DUPLEXER

The ferrite circulator is a three- or four-port device that can, in principle, offer separation of the transmitter and receiver without the need for the conventional duplexer configurations. The circulator does not provide sufficient protection by itself and requires a receiver protector as in Fig.

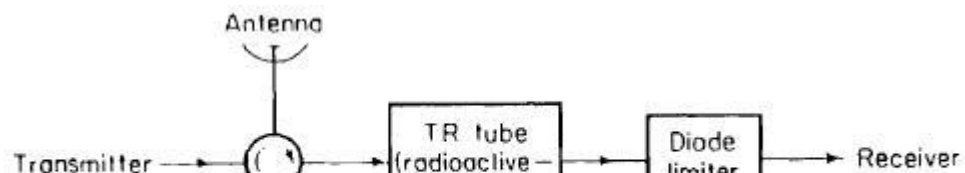

Figure .Circulator and receiver protector. **A** four-port circulator is shown with the fourth port terminated in a matched load to provide greater isolation between the transmitter and the receiver than provided by a three-port circulator

The isolation between the transmitter and receiver ports of a circulator is seldom sufficient to protect the receiver from damage. However, it is not the isolation between transmitter and receiver ports that usually determines the amount of transmitter power at the receiver, but the impedance mismatch at the antenna which reflects transmitter power back into the receiver. The VSWR is a measure of the amount of power reflected by the antenna. For example, a VSWR of 1.5 means that about 4 percent of the transmitter power will be reflected by the antenna mismatch in the direction of the receiver, which corresponds to an isolation of only **14** dB. About **11** percent of the power is reflected when the VSWR is 2.0, corresponding to less than **10** dB of isolation. Thus, a receiver protector is almost always required. It also reduces to a safe level radiations from nearby transmitters. The receiver protector might use solid-state diodes for an all solid-state configuration or it might be a passive TR-limiter consisting of a radioactive primed TR-tube followed by a diode limiter. The ferrite circulator with receiver protector is attractive for radar applications because of its long life, wide bandwidth, and compact design.

ELECTRONICALLY STEERED PHASED ARRAY ANTENNAS

Introduction:

The phased array is a directive antenna made up of individual radiating antennas, or elements, which generate a radiation pattern whose shape and direction is determined by the relative phases and amplitudes of the currents at the individual elements. By properly varying the relative phases, it is possible to steer the direction of the radiation. The radiating elements might be dipoles open-ended waveguides, slots cut in waveguide, any other type of antenna. The inherent flexibility offered by the phased-array antenna in steering the beam by means of electronic control is what has made it of interest for radar. It has been considered in those radar applications where it is necessary to shift the beam rapidly from one position in space to another, or where it is required to obtain information about many targets at a flexible, rapid data rate.

Basic concepts:

An array antenna consists of a number of individual radiating elements suitably spaced with respect to one another. The relative amplitude and phase of the signals applied to each of the elements are controlled to obtain the desired radiation pattern from the combined action of all the elements. Two common geometrical forms of array antennas of interest in radar are the linear array and the planar array. A linear array consists of elements arranged in a straight line in one dimension. A planar array is a two-dimensional configuration of elements arranged to lie in a plane. The planar array may be thought of as a linear array of linear arrays. A broadside array is one in which the direction of maximum radiation is perpendicular, or almost perpendicular to the line (or plane) of the array. An endfire array has its maximum radiation parallel to the array.

The linear array generates a fan beam when the phase relationships are such that the radiation is perpendicular to the array. When the radiation is at some angle other than broadside, the radiation pattern is a conical-shaped beam. The broadside linear-array antenna may be used where broad coverage in one plane and narrow beamwidth in the orthogonal plane are desired. The linear array can also act as a feed for a parabolic-cylinder antenna.

The combination of the linear-array feed and the parabolic cylinder generates a more controlled fan beam than is possible with either a simple linear array or with a section of a parabola. The combination of a linear array arid parabolic cylinder can also generate a pencil beam.

The endfire array is a special case of the linear or the planar array when the beam is directed along the array. Endfire linear arrays have not been widely used in radar applications. They are usually limited to a low or medium gains since an endfire linear antenna of high gain require excessively long array. Small endfire arrays are sometimes used as the radiating element of a broadside array if

directive elements are required. Linear arrays of endfire elements are also employed as low-silhouette antennas.

The two-dimensional planar array is probably the array of most interest in radar applications since it is fundamentally the most versatile of all radar antennas. A rectangular aperture can produce a fan-shaped beam. A square or a circular aperture produces a pencil beam. The array can be made to simultaneously generate many search and/or tracking beams with the same aperture.

An array in which the relative phase shift between elements is controlled by electronic devices is called an *electronically scanned array*. In an electronically scanned array the antenna elements, the transmitters, the receivers, and the data-processing portions of the radar are often designed as a unit. A given radar might work equally well with a mechanically positioned array, a lens, or a reflector antenna if they each had the same radiation pattern, but such a radar could not be converted efficiently to an electronically scanned array by simple replacement of the antenna alone because of the interdependence of the array and the other portions of the radar.

Radiation pattern:

Consider a linear array made up of N elements equally spaced a distance d apart (Shown in Fig-1 below). The elements are assumed to be isotropic point sources radiating uniformly in all directions with equal amplitude and phase. The outputs of all the elements are summed via lines of equal length to give a sum output voltage E_a, Element 1 will be taken as the reference signal with zero phase. The difference in the phase of the signals in adjacent elements is $\psi = 2\pi(\frac{d}{\lambda})\sin\theta$, where θ the direction of the incoming radiation is. It is further assumed that the amplitudes and phases of the signals at each element are weighted uniformly. Therefore the amplitudes of the voltages in each element are the same and, for convenience, will be taken to be unity. The sum of all the voltages from the individual elements, when the phase difference between adjacent elements is ψ , can be written

$$E_a = \sin\omega t + \sin(\omega t + \psi) + ... + \sin[\omega t + (N-1)\psi] \text{ ---------- } (1)$$

Where ω is the angular frequency of the signal. The sum can be written as,

$$E_a = \sin[\omega t + (N-1)\frac{\psi}{2}]\frac{\sin(N\frac{\psi}{2})}{\sin(\frac{\psi}{2})} \text{ ---------- } (2)$$

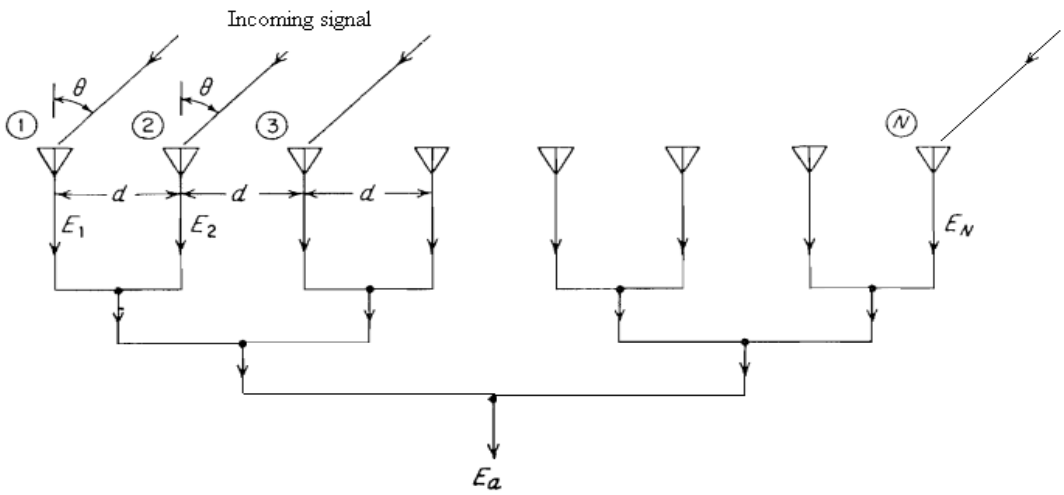

Fig-1: N-Element linear array

The magnitude of field intensity pattern is given by,

$$|E_a| = \left| \frac{\sin[N\pi(\frac{d}{\lambda})\sin\theta]}{\sin[\pi(\frac{d}{\lambda})\sin\theta]} \right| \text{ ---------- (3)}$$

From Eq (3). $E_a(\theta) = E_a(\pi - \theta)$ Therefore an antenna of isotropic elements has a similar pattern in the rear of the antenna as in the front. The same would be true for an array of dipoles. To avoid ambiguities, the backward radiation is usually eliminated by placing a reflecting screen behind the array. Thus only the radiation over the forward half of the antenna $(-90^0 \le \theta \le 90^0)$ need be considered.

Beam steering:

The beam of an array antenna may be steered rapidly in space without moving large mechanical masses by properly varying the phase of the signals applied to each element. Consider an array of equally spaced elements. The spacing between adjacent elements is d, and the signals at each element are assumed of equal amplitude. If the same phase is applied to all elements, the relative phase difference between adjacent elements is zero and the position of the main beam will be broadside to the array at an angle $\theta = 0^0$.The main beam will point in a direction other than broadside if the relative phase difference between elements is other than zero. The direction of the main beam is at an angle θ_0 when the phase difference is $\phi = 2\pi(\frac{d}{\lambda})\sin\theta_0$.The phase at each element is therefore $\phi_c + m\phi$,where m=0, 1, 2,……..(N-1),and ϕ_c is any constant phase applied to all elements.

The normalized radiation pattern of the array when the phase difference between adjacent elements is ϕ is given by

$$G(\theta) = \frac{\sin^2[N\pi(d/\lambda)(\sin\theta - \sin\theta_0)]}{N^2 \sin^2[\pi(d/\lambda)(\sin\theta - \sin\theta_0)]} \quad \text{---------- (4)}$$

The maximum of the radiation pattern occurs when $\sin\theta = \sin\theta_0$

Equation (4) states that the main beam of the antenna pattern may be positioned to an angle θ_0, by the insertion of the proper phase shift ϕ,at each element of the array. If variable, rather than fixed, phase shifters are used, the beam may be steered as the relative phase between elements is changed (Fig-2).

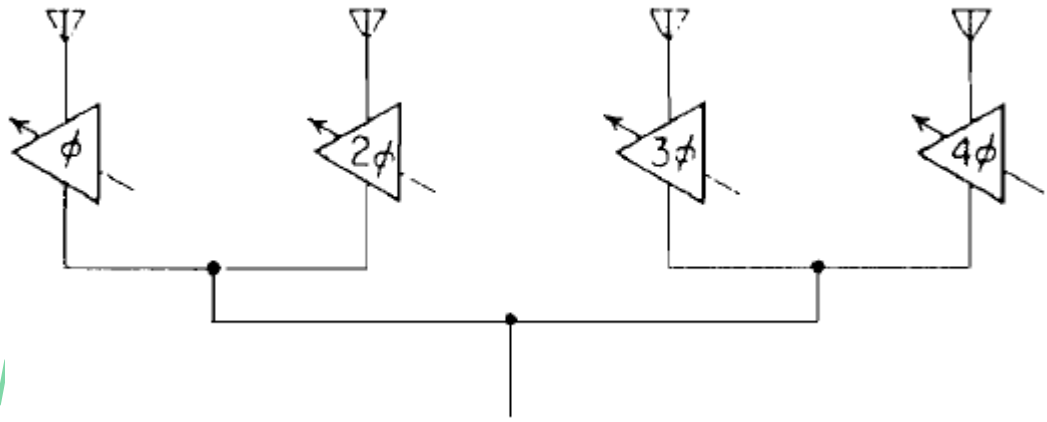

Fig-2: Steering of an antenna beam with variable phase shifters (parallel fed array)

Change of beam-width with steering angle:

The half-power beamwidth in the plane of scan increases as the beam is scanned off the broadside direction. The beamwidth is approximately inversely proportional to $\cos\theta_0$ Where θ_0 is the angle measured from the normal to the antenna. This may be proved by assuming that the sine in the denominator of Eq.(4) can be replaced by its argument, so that the radiation pattern is of the form $(\sin^2 u)/u^2$,where $u = N\pi(d/\lambda)(\sin\theta - \sin\theta)$ The $(\sin^2 u)/u^2$ antenna pattern is reduced to half its maximum value when $u = \pm 0.443\pi$ .Denote by θ_+ the angle corresponding to the half power point when $\theta > \theta_0$, and θ_- , the angle corresponding to the half-power point when $\theta < \theta_0$;

The $\sin\theta - \sin\theta_0$, term in the expression for u can be written

$$\sin\theta - \sin\theta_0 = \sin(\theta - \theta_0)\cos\theta_0 - [1 - \cos(\theta - \theta_0)]\sin\theta_0$$

The second term on the right hand side of above equation can be neglected when θ_0 is small , so that

$$\sin\theta - \sin\theta_0 \approx \sin(\theta - \theta_0)\cos\theta_0$$

Using the above approximation, the two angles corresponding to the 3-dB points of the antenna pattern are

$$\theta_+ - \theta_0 = \sin^{-1}\frac{0.443\lambda}{Nd\cos\theta_0} \approx \frac{0.443\lambda}{Nd\cos\theta_0}$$

$$\theta_- - \theta_0 = \sin^{-1}\frac{-0.443\lambda}{Nd\cos\theta_0} \approx \frac{-0.443\lambda}{Nd\cos\theta_0}$$

The half power beamwidth is

$$\theta_B = \theta_+ - \theta_- \approx \frac{0.886\lambda}{Nd\cos\theta_0}$$

Therefore, when the beam is positioned an angle θ_0 off broadside, the beamwidth in the plane of scan increases as $(\cos\theta_0)^{-1}$. The change in beamwidth with angle θ_0, as derived above is not valid when the antenna beam is too far removed from broadside. It certainly does not apply when the energy is radiated in the endfire direction.

Series Vs Parallel feeds:

The relative phase shift between adjacent elements of the array must be $\phi = 2\pi(d/\lambda)\sin\theta_0$ in order to position the main beam of the radiation pattern at an angle θ_0.The necessary phase relationships between the elements may be obtained with either a series-fed or a parallel fed arrangement. In the series-fed arrangement, the energy may be transmitted from one end of the line (Fig.3a), or it may be fed from the center out to each end (Fig.3b). The adjacent elements are connected by a phase shifter with phase shift ϕ.All the phase shifters are identical and introduce the same amount of phase shift, which is less than 2π radians. In the series arrangement of (Fig.3a) where the signal is fed from one end, the position of the beam will vary with frequency. Thus it will be more limited in bandwidth than most array feeds.

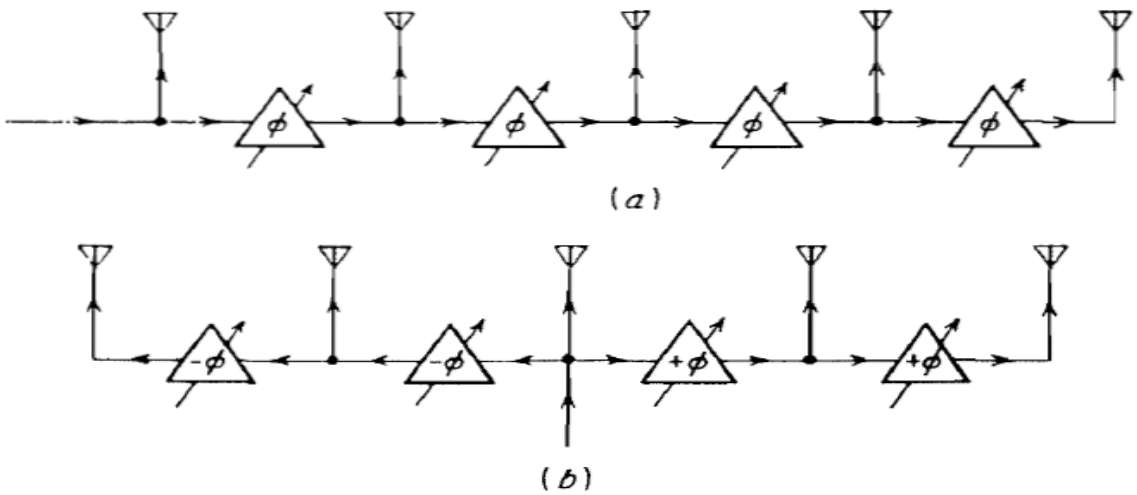

Fig-3: Series fed array a) From one end b) From center fed.

The center-fed feed of (Fig.3b) does not have this problem. In the parallel-fed array of Fig.1, the energy to be radiated is divided between the elements by a power splitter. When a series of power splitters are used to create a tree-like structure, as in Fig.1, it is called a corporate feed, since it resembles (when turned upside down) the organization chart of a corporation.

Equal lengths of line transmit the energy to each element so that no unwanted phase differences are introduced by the lines themselves. (If the lines are not of equal length, compensation in the phase shift must be made.) The proper phase change for beam steering is introduced by the phase shifters in each of the lines feeding the elements. When the phase of the first element is taken as the reference, the phase shifts required in the succeeding elements are $\phi, 2\phi, 3\phi, ...(N-1)\phi$.

The maximum phase change required of each phase shifter in the parallel-fed array is many times 2π radians. Since phase shift is periodic with period 2π , it is possible in many applications to use a phase shifter with a maximum of 2π radians. However, if the pulse width is short compared with the antenna response time (if the signal bandwidth is large compared with the antenna bandwidth), the system response may be degraded. For example, if the energy were to arrive in a direction other than broadside, the entire array would not be excited simultaneously.

The combined outputs from the parallel-fed elements will fail to coincide or overlap, and the received pulse will be smeared. This situation may be relieved by replacing the 2π modulo phase shifters with delay lines.

Applications of array in radar:

The array antenna has several unique characteristics that make it a candidate for consideration in radar application. However, the attractive features of the array antenna are sometimes nullified by several serious disadvantages. The array antenna has the following desirable characteristics not generally enjoyed by other antenna types:

Inertia less rapid beam steering: The beam from an array can be scanned, or switched from one position to another, in a time limited only by the switching speed of the phase shifters. Typically, the beam can be switched in several microseconds, but it can be considerably shorter if desired.

Multiple, independent beams: A single aperture can generate many simultaneous independent beams. Alternatively, the same effect can be obtained by rapidly switching a single beam through a sequence of positions.

Potential for large peak and/or average power: If necessary, each element of the array can be fed by a separate high-power transmitter with the combining of the outputs made in “space” "to obtain a total power greater than can be obtained from a single transmitter.

Control of the radiation pattern: A particular radiation pattern may be more readily obtained with the array than with other microwave antennas since the amplitude and phase of each array element may be individually controlled. Thus, radiation patterns with extremely low sidelobes or with a shaped main beam may be achieved. Separate monopulse sum and difference patterns, each with its own optimum shape, are also possible.

Graceful degradation: The distributed nature of the array means that it can fail gradually rather than all at once (catastrophically).

Convenient aperture shape: The shape of the array permits flush mounting and it can be hardened to resist blast.

Electronic beam stabilization: The ability to steer the beam electronically can be used to stabilize the beam direction when the radar is on a platform, such as a ship or aircraft, that is subject to roll, pitch, or yaw.

Limitations:

However, the major limitation that has limited the widespread use of the conventional phased array in radar is its high cost, which is due in large part to its complexity. The software for the computer system that is needed to utilize the inherent flexibility of the array radar also contributes significantly to the system cost and complexity.